SINCE 1976
Endless Possibilities

WIA Machine Tools

High Precision 5-axis Vertical Machining Center

KF-5A Series

KF3500/5A | KF6500/5A | KF7300/5A

WIA MACHINE TOOLS

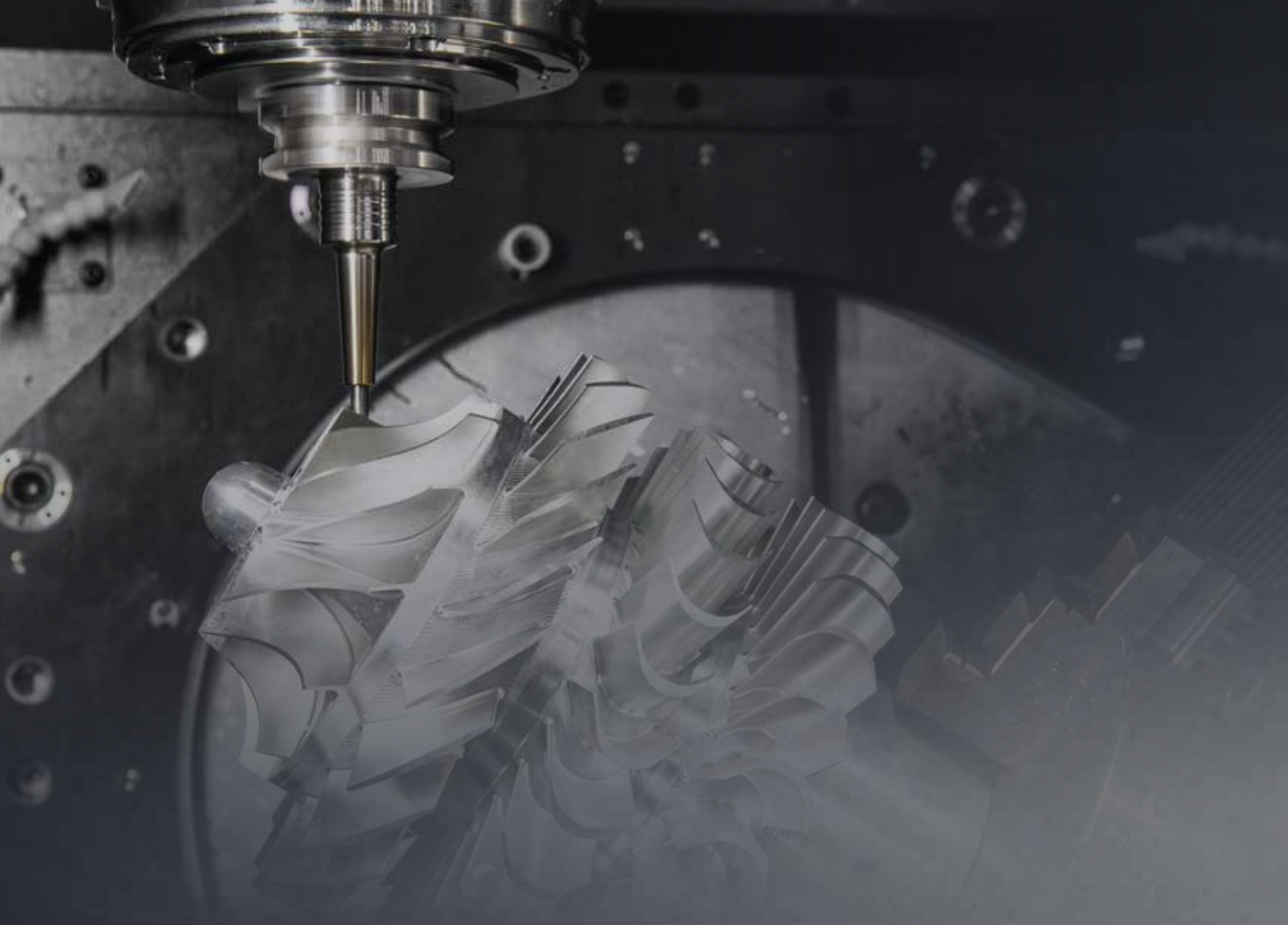

Technical Leader

The Vertical Machining Center KF-5A Series designed by WIA machine tools with years of expertise and the latest technology, ensures performance requirements of the High precision industry.
In addition, KF-5A Series can process products of various shapes with 5-axis table design.

	KF3500/5A	KF6500/5A	KF7300/5A
Table Size (L×W) mm(in)	Ø350 (Ø13.8″)	Ø630 (Ø24.8″)	Ø730 (Ø28.7″)
Max. Load Capacity kg(lb)	250 (551) (Max. Inertia : 2.09 kg.m^2)	400 (881.8)	500 (1,102)
Sp. Taper -	BBT40 [HSK-A63]		
Sp. Speed r/min	12,000 [15,000] [20,000]	12,000 [15,000] [20,000]	12,000 [20,000]
Sp. Power (Max./Cont.) kW(HP)	18.5/11 (25/15) [18.5/11 (25/15)] [22/18.5 (29.5/25)]	18.5/11 (25/15) [18.5/11 (25/15)] [37/15 (49.6/20.1)]	22/18.5 (29.5/25) [22/18.5 (29.5/25)]
No. of Tools EA	30 [40, 60]	30 [40, 60, 90, 120]	40 [60]
Travel (X/Y/Z) mm(in)	400 (+200)/655/500 (15.7″{+7.9″}/25.8″/19.7″)	650/520/480 (25.6"/20.5"/18.9")	765/650/520 (30.1"/25.6"/20.5")
Rapid Traverse Rate m/min(ipm)	36/36/30 (1,417/1,417/1,181)	42/42/42 (1,653/1,653/1,653)	40/40/40 (1,575/1,575/1,575)

[ ] : Option

KF-5A Series

Best Performance in the Class & 5-axis Machining

- 5-axis table to satisfy various machining needs
- Column moving structure for automation system (KF6500/5A, KF7300/5A)
- High speed 20,000rpm built-in spindle for the utmost quality machining (Option)
- All axis roller type LM guide for high speed & rigidity
- Improved user convenience by applying the latest controller of FANUC
  (KF6500/5A : Adopted laptop style O.P & 19-inch touch monitor applied)

01 KF3500/5A

Super Quality & productivity 5-axis Vertical Machining Center

ATC & Magazine

- No. of Tools : 30 [40, 60] EA
- Max. Tool Length : 270 mm (10.6″)
- Max. Tool Dia. (W.T/W.O)
  30T : Ø80/Ø125 mm (Ø3.1″/Ø4.9″)
  40, 60T : Ø76/Ø125 mm (Ø3″/Ø4.9″)

High Precision Spindle

- Direct Spindle : 12,000 [15,000] r/min
- Built-in Spindle : [20,000] r/min
- Hydraulic Tool Lock Method
- Tool Shank : BBT40 [HSK-A63]

5-axis Table

- Table Size : Ø350 mm (Ø13.8″)
- Max. Load Capa. : 250 kg (551 lb)
- Driving Method : Roller Gear Cam

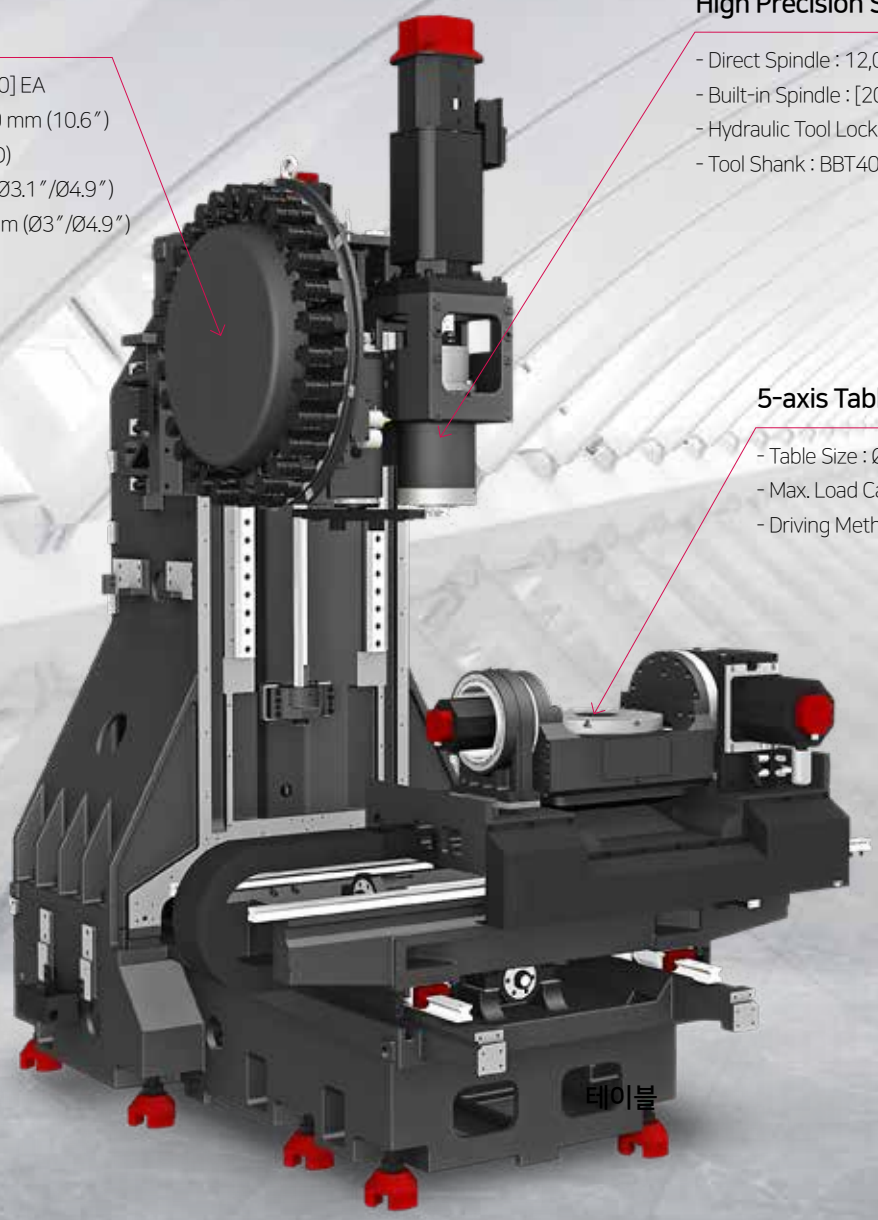

[ ] : Option

HIGH PRECISION & HIGH SPEED

HIGH-PRECISION STRUCTURE

Optimal Structural Analysis

KF3500/5A is designed to have optimal structure through WIA machine tools's unique structural analysis.

In particular, enhancement of bed and column's rigidity makes excellent performance even in heavy duty cutting.

Optimization of Installation Area

Installation is convenient even in small spaces with compact size of 6.2㎡ and it improves space efficiency for the factory of customers.

Floor Space (L×W)	2,845×2,274 mm (112″×89.5″)

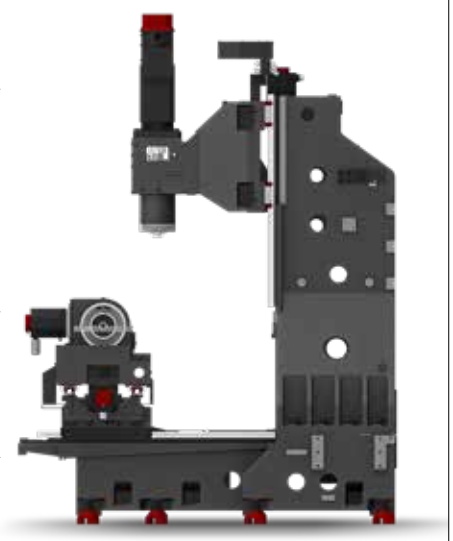

GUIDE WAY

High-Speed Roller LM Guideway

By applying an roller LM guide structure with high speed and rigidity, rapid traverse rate of **36m/min** (1,417 ipm) is achieved based on the X/Y axis.

Ball Screw

The pretensioned ball screw minimizes the expansion and contraction according to the heat and further reinforces the rigidity by the double anchor support method.

<Z-axis ball screw 3 Row bearing>

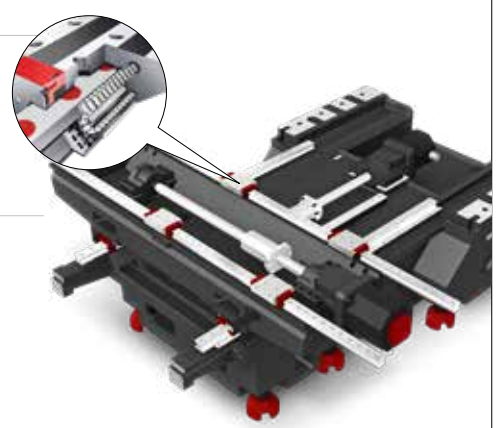

Rapid Traverse Rate (X/Y/Z) (B/C)		**Travel** (X/Y/Z)
36/36/30 m/min	30/40 rpm	400{+200}/655/500 mm
(1,417/1,417/1,181 ipm)		(15.7″{+7.9″}/25.8″/19.7″)

※ Very outstanding A/C axis rotation speed with application of roller gear cam

HIGH PRECISION **SPINDLE**

Excellent machining performance with high-precision spindle

KF3500/5A Spindle Specifications

[ ] : Option

Speed r/min	Motor (Max./Cont.)	Torque (Max./Cont.)	Driving Method
12,000 rpm	**18.5/11** kW (25/15 HP)	**118/52.5** N·m (87/38.7 lbf·ft)	Direct
[**15,000** rpm]	[**18.5/11** kW (25/15 HP)]	[**118/52.5** N·m] (87/38.7 lbf·ft)	
[**20,000** rpm]	[**22/18.5** kW (29.5/25 HP)]	[**98/80** N·m] (72.3/59 lbf·ft)	Built-in

KF3500/5A Table Specifications

Table Size	Max. Load Capacity	Slope Angle	Rotation Angle	Min. Indexing Angle	Driving Method
Ø350 mm (Ø13.8″)	**250** kg (551 lb)	**+30˚ ~ -120˚**	**360˚**	**0.001˚**	**Roller Gear Cam**

HIGH-PERFORMANCE SPINDLE & TABLE

SPINDLE

Direct Driven Spindle

The directly coupled spindle at a maximum revolution of 12,000rpm [Opt. 15,000rpm], allows high-speed processing. Additionally, the large diameter and the thickness of the spindle add to the stability of the machine.

20,000rpm Built-in Spindle OPTION

The built-in spindle minimizes spindle vibration, enabling outstanding performance in a high-precision cutting environment such as complex shaped work-piece.

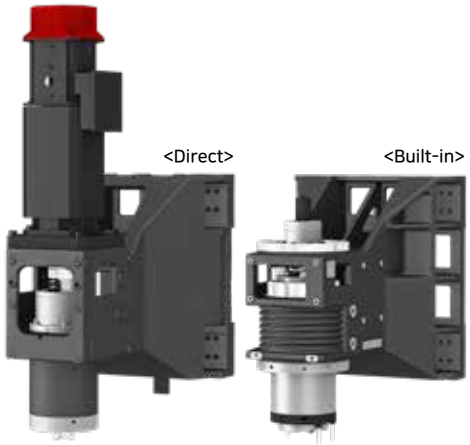

Through Spindle Coolant (20/30/70 bar) (290/435/1,015 psi) OPTION

Through Spindle Coolant is exceedingly useful when drilling deep holes. It helps increase the lifetime of the tool, while decreasing cycle time.

Dual Contact Spindle

The Big Plus spindle system (BBT40) provides dual contact between the spindle face and the flange face of the tool holder.

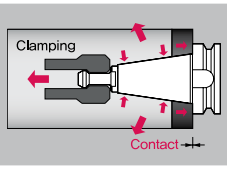

TABLE

5-axis Tilting Rotary Table

The 5-axis tilting rotary table allows users to produce a wide range of complicated work pieces. The 'C' axis has full 360° rotation and the 'A' axis has 150° rotation.

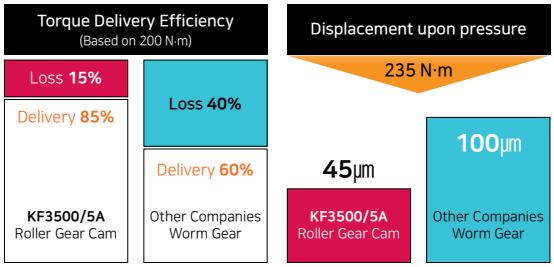

Roller Gear Cam

KF3500/5A developed with application of accumulative know-how and new technology of WIA machine tools is a next-generation machining center featuring optimal performance in complex form machining. Also, it has superb precision and durability while also being excellent for 5-axis machining with less power loss even at high-speed rotation.

※ Superior power delivery efficiency and strength compared to worm gear table of other companies

02 KF6500/5A

Automation compatible high performance 5-axis machining center

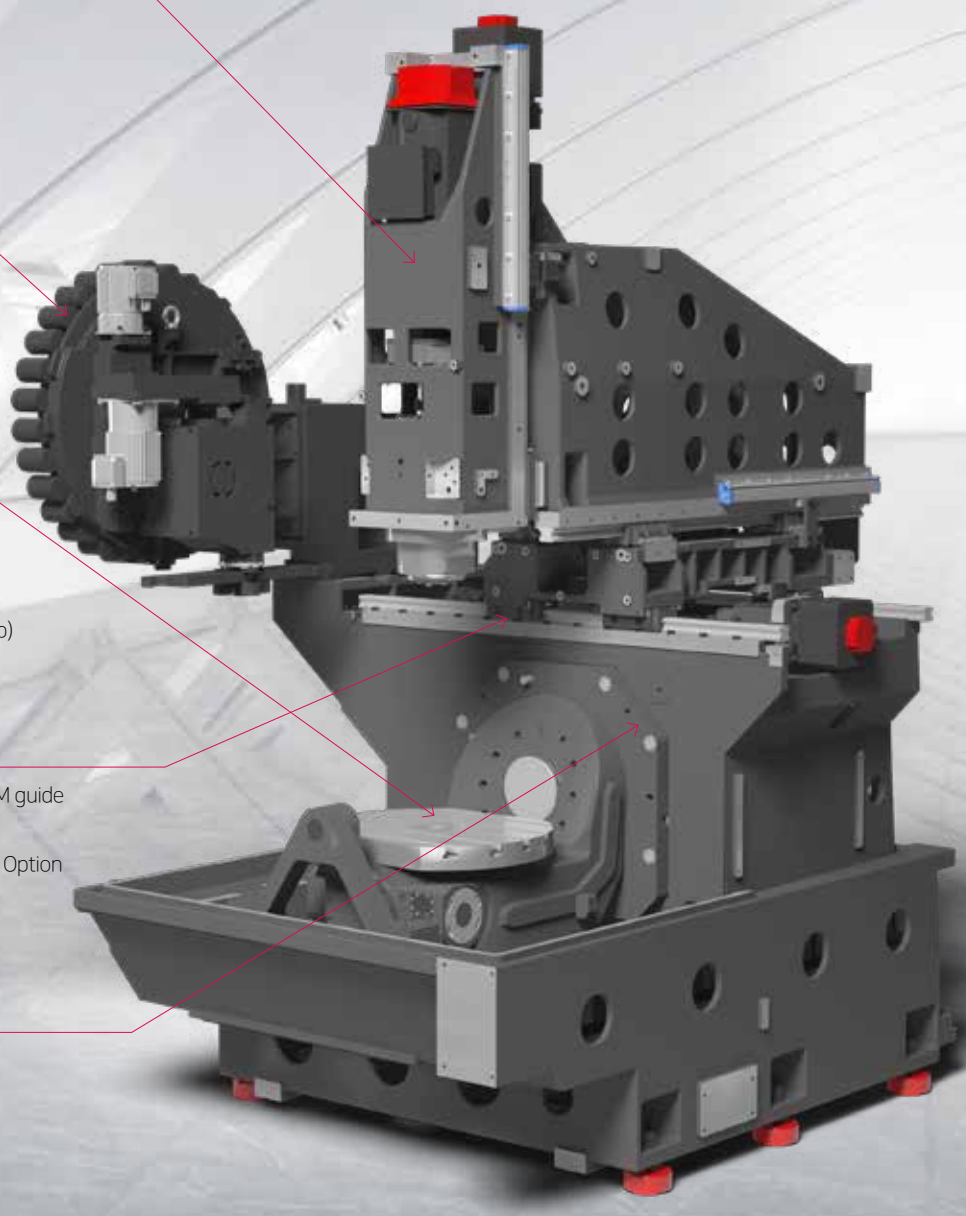

Spindle

- STD :12,000rpm (Direct)
  [15,000rpm] (Direct)
  [20,000rpm] (Built-in)

ATC & Magazine

- BBT40 [HSK-A63]
- STD 30T
  [40, 60, 90, 120T]

Table

- Front/Rear fixed structure
  (Optimal for automation)
- B/C axis roller gear cam method
- Table dia : Ø630 (24.8")
- Max work piece weight : 400 kg (882 lb)

Guide Way

- All axis high performance roller type LM guide
- Shaft cooling ball screw as Option
- LM guide mounting surface cooling as Option

Wall Type Column

- High rigidity and vibration absorbance
- Compact design

[ ] : Option

HIGH PRECISION & HIGH SPEED MACHINING CENTER

STABLE MACHINING STRUCTURE

Asymmetric X-axis structure (Left/right)

KF6500/5A X-axis is designed to travel 400mm(15.8") to minus directrion(left) and 250mm(9.8") to plus direction(right) from the zero center. The asymmetric X-axis structure allows enough work space even after fully tilting B-axis. This structure can provide stable machining of work piece up to max diameter Ø650(25.6"), max height 500mm(19.7").

Chip direct descent structure

The chip direct descent structure will allow the chips made during machining fall directly to the chip conveyor. Chip troubles due to chip blockage is fundamentally blocked due to the machine structure. Also, as the high temperature chips & coolant does not stack on the bed, it can minimize heat displacement.

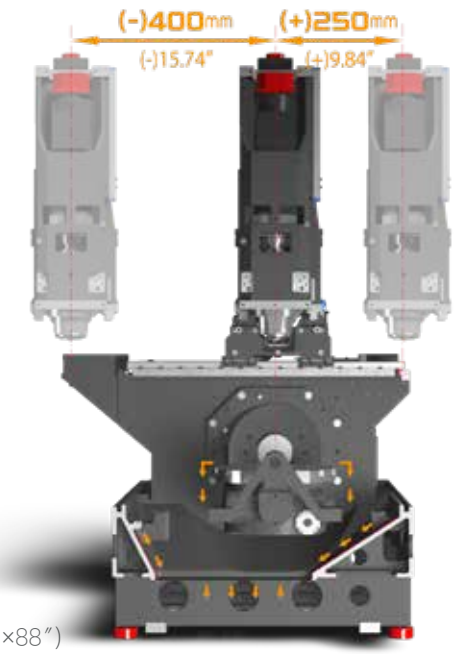

Floor Space (L×W)	2,740×2,235 mm (107.9″×88″)

GUIDE WAY

All axis roller type LM guide

KF6500/5A linear axis is equipped with high rigidity & speed roller type LM guide as standard.

Guide way grease lubrication

By applying grease lubrication guideway, convenience and cost-efficiency is significantly improved compared to the oil lubrication method.

Rapid Traverse Rate (X/Y/Z) (B/C)	**Travel** (X/Y/Z)
42/42/42 m/min 30/30 rpm (1,653/1,653/1,653 ipm)	650/520/480 mm (25.6″/20.5″/18.9″)

HIGH ACCURACY **SPINDLE** & **TABLE**

High performance direct spindle, roller gear cam type table

TABLE

5-axis tilting rotary table (Standard)

With the adoption of a rotary table that combines C-axis capable of 360° rotation and B-axis capable of up to 150° rotation, It enables the machining of products with various shapes, offering excellent productivity and machining quality.

B/C-axis roller gear cam driving method

The roller gear cam drive system allows smooth acc/deceleration unique to device characteristics based on the cam curve settings. It also provides exceptional precision and durability, with minimal power loss even at high-speed rotation, making it highly suitable for 5-axis machining.

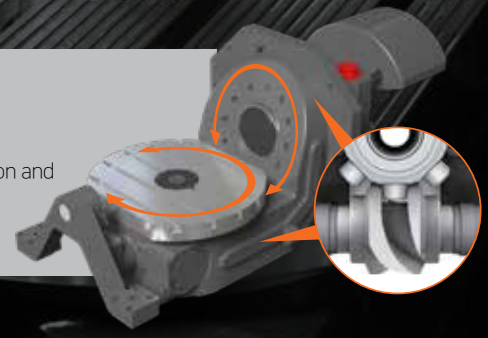

KF6500/5A Table Specifications

Table Size	Max. Load Capacity	Slope Angle	Rotation Angle	Driving Method
Ø630 mm (Ø24.8″)	400 kg (881.8 lb)	+120° ~ -30°	360°	Roller Gear Cam

HIGH-PERFORMANCE SPINDLE & TABLE

SPINDLE

Direct spindle (12k, 15k)

The motor and spindle are directly connected to reduce the spindle acc/deceleration time. For higher spindle rpm, it is designed with ultra-precision high-speed angular ball bearings, enabling a wide range of machining with a maximum rotation speed of 15,000 rpm.

Built-in spindle (20k)

The spindle, designed with a built-in motor structure, minimizes vibration and heat generation during high-speed rotation, enabling rapid acc/deceleration. It also maintains stable precision even during high-speed heavy-duty machining.

Spindle cooling

The spindle oil cooling system is equipped as standard, ensuring a constant spindle temperature even during prolonged machining operations, thereby guaranteeing stable machining performance.

Through spindle coolant (20/30/70 bar) OPTION

As an optional feature, high pressure through spindle coolant can be used, providing excellent performance in chip management and deep hole machining.

Dual contact Spindle

The application of dual contact spindle, where both spindle face and taper surface make simultaneous contact, increases clamping force and reduces vibration, enabling high precision and high speed cutting.

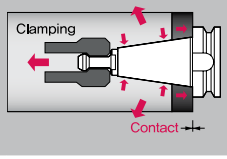

KF6500/5A Spindle Specifications

[ ] : Option

Speed r/min	Motor (Max./Cont.)	Torque (Max./Cont.)	Driving Method
12,000 rpm	**18.5/11** kW (25/15 HP)	**118/52.5** N·m (87/38.7 lbf·ft)	Direct
[**15,000** rpm]	[**18.5/11** kW (25/15 HP)]	[**118/52.5** N·m] (87/38.7 lbf·ft)	[Direct]
[**20,000** rpm]	[**37/15** kW (49.6/20.1 HP)]	[**221/80** N·m (163/59 lbf·ft)]	[Built-in]

USER **CONVENIENCE**

Inner diameter chip disposal coolant nozzle (Opt.)

When machining the inner diameter of a "CUP" shaped material, chip removal is difficult. On the side of KF6500/5A table, high pressure coolant is installed as standard so that inner diameter chip disposal can be done effectively.

Touch type magazine control panel (Std.)

- Easy operation: Manual/automatic mode, manual interrupt, emergency stop
- Monitoring: Tool information display, machine alarm display, sensor operation status display
- Maintenance: Step operation, magazine recovery function
- Convenience: Tool call function for standby position, multilingual support

Over head crane entry space

To allow load/unloading workpiece with the use of over head crane, KF6500/5A provides an entry space at the top of the machine. Load/unloading of workpiece is possible without the interferrance of over head crane rope.

Hydraulic/Pneumatic port interface for automation OPTION

Under the table (Max) 6 HYD/PNE ports can be installed. (HYD 4ea, PNE 2ea) With the fixture interface, even complex fixtures can be managed flexibly.

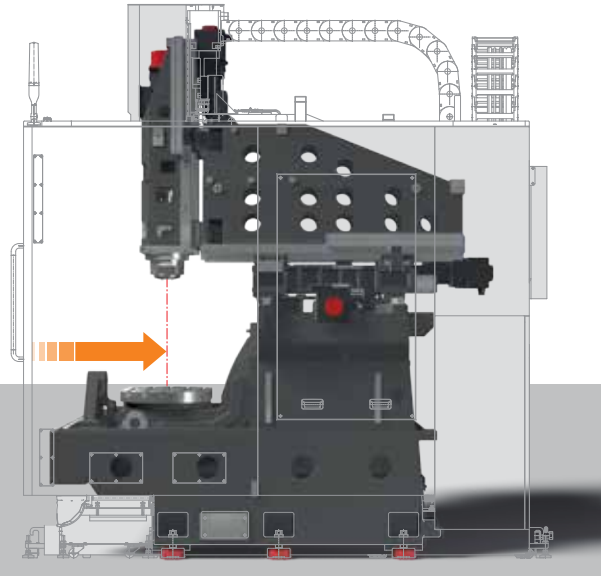

Shorter distance between table center and machine front

The distance between table ce`nter and machine front is shortened so that workpiece load/unloading, maintenance jobs can be done efficiently.

HIGH **PRECISION**

COOLING-BASED HIGH-ACCURACY SUPPORT STRUCTURE

Shaft cooling ball screw OPTION

KF6500/5A includes shaft cooling ball screw system as Option. This system sends cooling oil flows through the ball screw shaft to minimize thermal displacement caused by repetitive motion.

LM guide mounting surface cooling OPTION

Heat conduction to the rail due to repetitive motion of LM guide can be a significant cause of thermal displacement.

To resolve such situation, KF6500/5A applies a cooling method to the mounting surface of the LM guide, ensuring consistent precision even during extended machining operations.

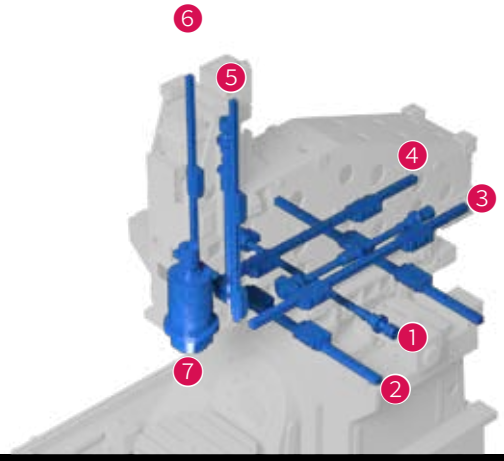

1. X-Axis Shaft cooling ball screw
2. X-Axis LM guideway cooling
3. Y-Axis Shaft cooling ball screw
4. Y-Axis LM guideway cooling
5. Z-Axis Shaft cooling ball screw
6. Z-Axis LM guideway cooling
7. Spindle bearing and motor plate cooling

HIGH PRECISION ROTARY AXIS

B/C-axis rotary scale (Standard)

5-axis machining centers often face challenges in achieving high precision result due to the application of rotary axes. To address this, KF6500/5A includes high precision rotary scales on B/C-axis as standard, ensuring consistent precision even during extended machining operations.

X/Y/Z-axis linear scale

Optional linear scales can be applied to synergizes with the rotary encoder to enable even more precise machining.

03 KF7300/5A

Super Quality & productivity 5-axis Vertical Machining Center

High Precision Spindle

- Built-in Spindle
- 12,000 r/min [20,000 r/min]
- Y-axis Ram Type
- Tool Shank : BBT40 [HSK-A63]

ATC & Magazine

- No. of Tools : 40 [60] EA
- Max. Tool Length : 300 mm (11.8″)
- Max. Tool Dia. (W.T/W.O)
  40T : Ø76/Ø125 mm (Ø3″/Ø4.9″)
  [60T : Ø75/Ø127 mm (Ø3″/Ø5″)]

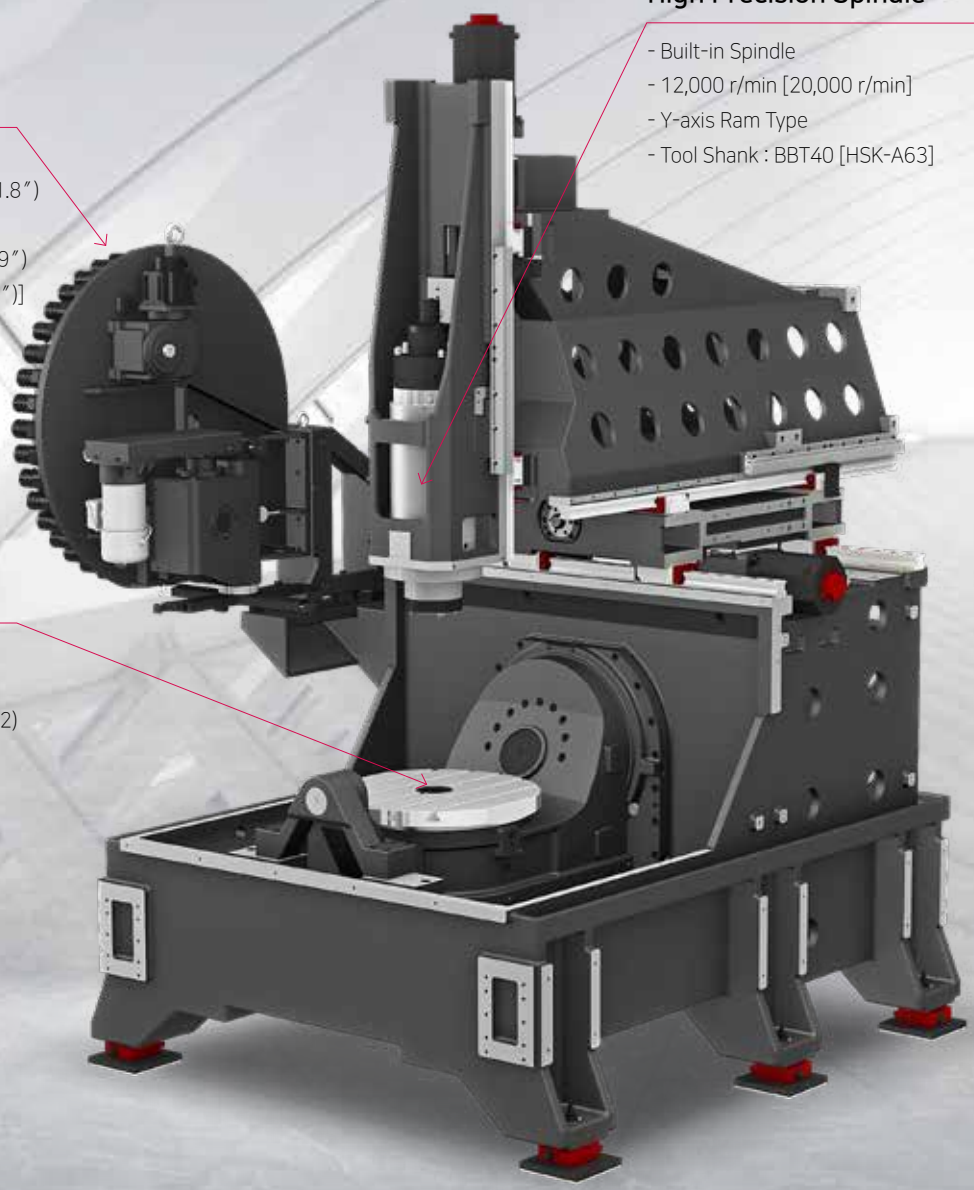

5-axis Table

- Table Size
  Ø730 mm (Ø28.7″)
- Max. Load Capa. : 500 kg (1,102)
- Driving Method : Gear

[ ] : Option

HIGH PRECISION & HIGH SPEED

HIGH-PRECISION STRUCTURE

Wall Type Structure

The strucutre of KF7300/5A is a wall type for high-precision machining.

In particular, the feed is separated from the table to maintain high-precision machining even in heavy work.

Optimization of Installation Area

Installation is convenient even in small spaces with compact size of 10.1m² and it improves space efficiency for the factory of customers.

Floor Space (L×W)	3,050×3,300 mm (120.1″×129.9″)

Direct Chip Discharge Structure

The structure was designed for the chip to fall directly to the lower part of the bed to improve chip discharge capability, and the high-temperature chips and coolant are discharged immediately without accumulating on the bed, minimizing thermal deformation of the structure.

GUIDE WAY

Roller Type LM Guideway

For processing the highest quality products, the KF7300/5A is designed with roller LM guideways for high rigidity and enhanced acc/deceleration.

Grease Lubrication Method

Significant cost savings is achieved by incorporating the grease lubrication system versus the oil lubrication method.

Rapid Traverse Rate (X/Y/Z) (B/C)	**Travel** (X/Y/Z)
40/40/40 m/min 25/30 rpm (1,575/1,575/1,575 ipm)	765/650/520 mm (30.1″/25.6″/20.5″)

SPINDLE & TABLE

Excellent machining performance with high-precision spindle & table

KF7300/5A Spindle Specifications

[ ] : Option

Speed r/min	Motor (Max./Cont.)	Torque (Max./Cont.)	Driving Method
12,000 rpm	22/18.5 kW (29.5/25 HP)	204/119 N·m (150.5/87.8 lbf·ft)	Built-in
[20,000 rpm]	[22/18.5 kW (29.5/25 HP)]	[98/80 N·m (72.3/59 lbf·ft)]	

KF7300/5A Table Specifications

Table Size	Max. Load Capacity	Slope Angle	Rotation Angle	Min. Indexing Angle	Driving Method
Ø730 mm (Ø28.7″)	500 kg (1,102 lb)	+120˚ ~ -20˚	360˚	0.001˚	Gear

HIGH-PERFORMANCE SPINDLE & TABLE

SPINDLE

Built-in Spindle

The built-in spindle is designed to minimize vibration and heat, as well as deliver rapid acc/deceleration. Stable precision is maintained even under high speed and heavy duty operations.

Ram Type Spindle

The main shaft of KF7300/5A is a ram-type application, which minimizes the weight of the transported body and greatly improves the dynamic performance.

Spindle Cooling

The spindle cooling system minimizes thermal displacement which can happen during lengthy machining operations, and offers continued accuracy based on the thermal stability.

Through Spindle Coolant (20/30/70 bar) (290/435/1,015 psi) OPTION

Through Spindle Coolant is exceedingly useful when drilling deep holes. It helps increase the lifetime of the tool, while decreasing cycle time.

Dual Contact Spindle

The Big Plus spindle system (BBT40) provides dual contact between the spindle face and the flange face of the tool holder.

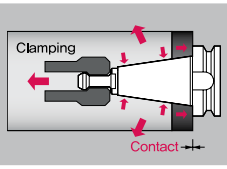

TABLE

5-axis Tilting Rotary Table Standard Application

The rotary table allows users to produce a wide range of complicated work pieces. It is possible to clamp each axis for extra rigidity and accuracy when machining.

- B-axis + support bearing structure (One-side drive type)
- Double Pinion Gear drive : backlash Free

<B/C axis rotary scale standard application>

04 ATC & MAGAZINE

High Productivity Achieved with High Rigidity, Accuracy Machining

ATC Specifications

[ ] : Option

Model	No. of Tools	Max. Tool Length	Max. Tool Dia. (W.T/W.O)	Max. Tool Weight	Tool Shank
KF3500/5A	30 [40, 60] EA	270 mm (10.6″)	30T : Ø80/125 mm (Ø3.1″/Ø4.9″) [40, 60T : Ø76/125 mm (Ø3″/Ø4.9″)]	8 kg (18 lb)	BBT40 [HSK-A63]
KF6500/5A	30 [40, 60, 90, 120] EA	300 mm (11.8″)	Ø80/125 mm (Ø3.1″/Ø4.9″)		
KF7300/5A	40 [60] EA	300 mm (11.8″)	Ø76/125 mm (Ø3″/Ø4.9″) [60T : Ø75/127 mm (Ø3″/Ø5″)]		

HSK TOOL HOLDER OPTION

HSK tool holder is untilized for precise positioning with less expansion in the spindle taper during high speed rotation. This ensures an excellent level of precision machining.

HSK-A63

HIGH RIGIDITY, TOOL CHANGE SYSTEM

ATC

High Speed ATC

Position control through twin arm ATC on servo motors has been improved drastically. In addition, tool exchanging has become easier, reducing specific cutting time tremendously.

Position control on the Twin Arm ATC has improved drastically. The twin arm ATC enables faster tool change and increased productivity.

Tool Change Time (C-C)

KF3500/5A : 3.4 sec KF6500/5A : 3.4 sec KF7300/5A : 5.4 sec

MAGAZINE

KF65000/5A

Automation specialized KF6500/5A offers standard magazine capacity of **30 tools**, with optional magazines available in **40, 60, 90,** and **120 tools**. Particularly, with the application of AWC (Automatic Tool Changer), it can accommodate sufficient tools, delivering optimal performance for unmanned automation.

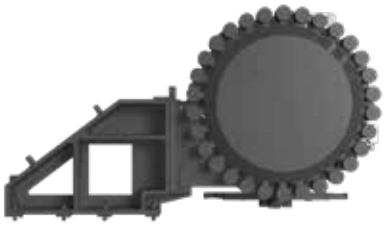

KF73000/5A

The tool magazine holds **30 tools** as standard and **60 tools** as an option. Due to the wider selection of tools and the random tool selection method, tool change time has improved.

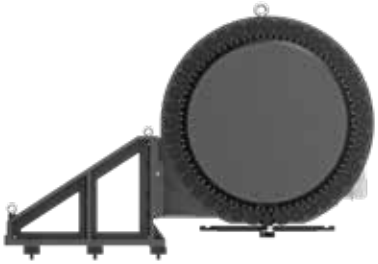

ATC Shutter (KF65000/5A)

KF6500/5A is equipped with an ATC shutter inside the machine, preventing the ingress of dust and coolant into the ATC and magazine, creating a clean and comfortable working environment.

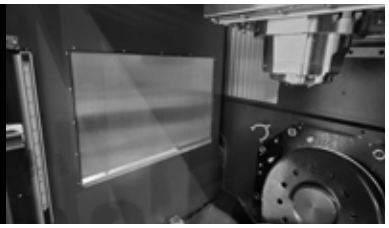

05 USER **CONVENIENCE**

Various Devices for User Friendly

CHIP DISPOSAL SOLUTION & COOLANT UNIT

Cutting Air Blow (Opt.)

Bed Flushing Coolant (Opt.)

Gun Coolant (Opt.)

Air Gun (Opt.)

Upper-type Conveyor (KF3500/5A)

The upper type chip conveyor is applied as a standard to efficiently remove chips generated during machining.

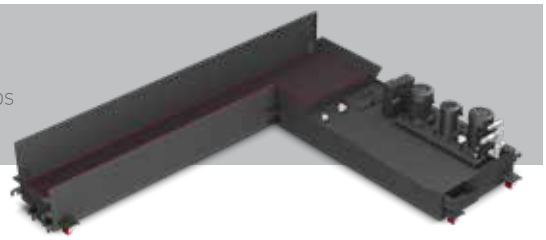

chip Conveyor

Hinge	Chip Type : Roughing Chip, Long Chip, Chip complex	Material : SS41, 45C, Cast Steel	Side/Rear Direction
	Highly efficient when disposing a lot of chips. Capable of handling stringy chips..		
Scraper	Chip Type : Finely broken chip blown out	Material : cast Iron, Nonferrous	
	Convenient for shortly cut chips.		

PRECISION SYSTEM

Linear Scale

Touch Sensor

TLM (Laser & Touch)

AUTOMATION SYSTEM

KF6500/5A, KF7300/5A + AWC

(Automatic Workpiece Changer)

- Optimal Accessibility to Automation
- Configurable from 320mm(12.59")-10 Pallets to 500mm(19.68")-4 Pallets
- Applicable to workpieces up to 250 kg(551 lb)
  (Pneumatic Chuck : Max. 250 kg(551 lb))
- **Telescopic 2-stage ARM Structure** (Max St. 1,700 mm (66.9"))

Workpice Size	No. of Table
□320 (□12.6″)×H350 mm (H13.8″)	10 EA
□350 (□13.8″)×H350 mm (H13.8″)	8 EA
□400 (□15.7″)×H350 mm (H13.8″)	6 EA
□500 (□19.7″)×H350 mm (H13.8″)	4 EA

06 FANUC - SMART PLUS

The Compatible All-round Control

15″ Touch-type Monitor as a standard

Smart Machine Control	Fast Cycle Time Technology
	Fine Surface Technology
Conversational Program	Smart Guide-i
i-HMI	Machining-aid Function
AI Contour Control	AICC-2 (200 blocks)
Smooth Tolerance Control	0.1μm command and specify tolerance
JERK Control	Diminished vibration by controlling acceleration speed
Machining Condition Selection	Designated machining level based on speed & quality
Machining Quality Control Function	Smooth Tolerance+ integrated support
Part Program Storage	5120M (2MB)
No. of Registerable Programs	1000 EA

8ch. Thermal displacement compensation

KF6500/5A, KF7300/5A : Std., KF3500/5A : Opt.

Control Software

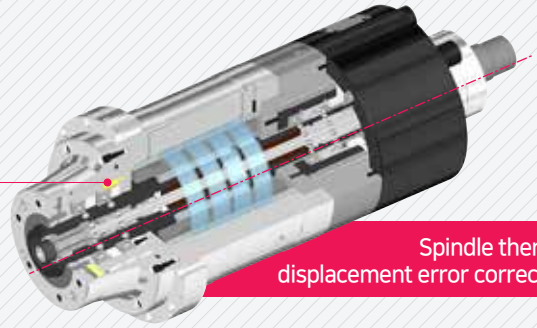

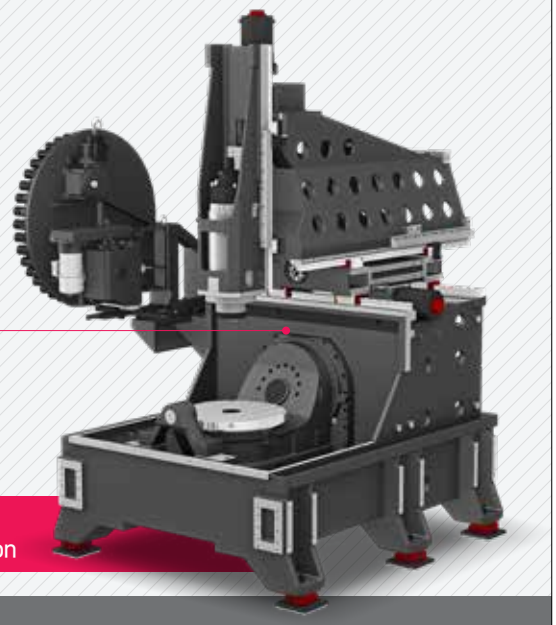

Machine tools generate thermal displacement due to heat during machining.
WIA machine tools detect thermal changes through thermal sensors installed on the main thermal sources of the machine.
In addition, a thermal displacement compensation device that predicts the amount of thermal displacement according to the amount of thermal change and provides a command to the motor with a compensated value to maintain consistent precision is provided as an option.

SMART CNC (FANUC Smart Plus)

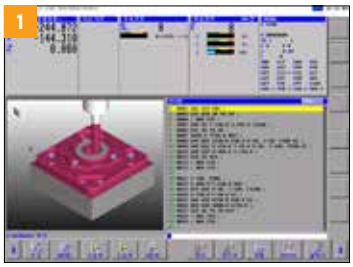

1. Dialogue Program (Smart Guide-i)
This software offers the maximum user convenience through dialogue manipulation from setup to processing. This includes writing processing programs and simulation checks.

2. LAUNCHER
This software offers shortcuts for quick access to specialized features and frequently used features.

SPECIFICATIONS

Standard & Optional (KF3500/5A)

● : Standard ○ : Option ☆ : Prior Consultation - : Non Applicable

Spindle		KF3500/5A
12,000rpm (18.5kW)	Direct	●
15,000rpm (18.5kW)	Direct	○
20,000rpm (22kW)	Built-in	○
Spindle Cooling System		●
ATC		
ATC Extension	30	●
	40	○
	60	○
Tool Shank Type	BBT40	●
	HSK-A63	○
	BCV40	○
U-Center	Dandrea	-
Pull Stud	45°	●
Table & Column		
T-Slot Table		●
NC Rotary Table		●
Coolant System		
Std. Coolant (Main Spindle Nozzle)		●
* Through Spindle Coolant	20bar	○
	30bar, 20 ℓ	○
	70bar, 15 ℓ	○
	70bar, 30 ℓ	○
Top Cover		●
Shower Coolant		○
Gun Coolant		○
Bed Flushing Coolant		○
Air Gun		○
Cutting Air Blow		○
Tool Measuring Air Blow (Only for TLM)		○
Chip Disposal		
Coolant Tank	365 ℓ	●
Interior Screw Chip Conveyor		●
Upper Chip Conveyor (Hinge)	Left	○
	right	○
Screw Type Chip Conveyor	Left	☆
	right	☆
Drum Filter Type Chip Conveyor	Left	☆
	right	☆
	rear	☆
Chip Wagon	Standard (180 ℓ [47.5 gal])	○
	Swing (200 ℓ [52.8 gal])	○
	Large Swing (290 ℓ [76.6 gal])	○
	Large Size (330 ℓ [87.2 gal])	○
	Customized	☆
S/W		
Dialogue Program (HW-DPRO)		○ (3+2 axis support)
DNC software (HW-eDNC)		○
Smart Guide-i : FANUC		●
Smart S/W		☆

Electric Device		KF3500/5A
Call Light	1 Color :	●
Call Light & Buzzer	3 Color : B	○
Electric Cabinet Light		○
Remote MPG		●
3 Axis MPG		○
Work Counter	Digital	○
Total Counter	Digital	○
Tool Counter	Digital	○
Multi Tool Counter	Digital	☆
Electric Circuit Breaker		○
Transformer	30kVA	○
Auto Power Off		○
Back up Module for Black out		○
Measuring Device		
Air Zero	TACO	-
	SMC	-
Work Measuring Device		○
TLM	Touch	○
	Laser	-
Tool Broken Detective Device		-
Linear Scale	X/Y/Z Axis	○
Rotary Scale	A/C Axis	○
Coolant Level Sensor (Bladder Type)		☆
Environment		
Air Conditioner		○
Oil Mist Collector		☆
Oil Skimmer (Only for Chip Conveyor)		○
MQL (Minimal Quantity Lubrication)		☆
Fixture & Automation		
Auto Door		○
Auto Shutter (Only for Automatic System)		-
Sub O/P		☆
External M Code 4EA		○
Automation Interface		☆
I/O Extension (In & Out)	16 Contact	☆
	32 Contact	☆
AWC (Automatic Workpiece Changer)		-
Hyd. Device		
Standard Hyd. Unit	70bar/15 ℓ	●
Central Hyd. supply	6 port, Max. 70bar	○
Hyd. Unit for Fixture	Customized	☆
ETC		
Tool Box		●
Customized Color	Need for Munsel No.	☆
CAD&CAM Software		☆
Thermal Displacement Compensation Device	8 channels	○

*1 : Please check the filter types with sales representative.

Specifications are subject to change without notice for improvement.

SPECIFICATIONS

Standard & Optional (KF6500/5A)

● : Standard ○ : Option ☆ : Prior Consultation - : Non Applicable

Spindle		KF6500/5A
12,000rpm (18.5kW)	Direct	●
15,000rpm (18.5kW)	Direct	○
20,000rpm (37kW)	Built-in	○
Spindle Cooling System		●
ATC		
ATC Extension	30	●
	40	○
	60	○
	90	○
	120	○
Tool Shank Type	BBT40	●
	HSK-A63	○
	BCV40	○
U-Center	D'andrea	☆
Pull Stud	45°	●
Table & Column		
Table Size	Ø630	●
T-Slot Table		●
NC Rotary Table	Roller gear cam	●
	DDM	○
Coolant System		
Std. Coolant (Main Spindle Nozzle)		●
* Through Spindle Coolant	20bar	○
	30bar	○
	70bar	○
Top Cover		●
Shower Coolant		○
Gun Coolant		○
Bed Flushing Coolant		●
Inner diameter chip disposal coolant nozzle		○
Air Gun		○
Cutting Air Blow		○
Tool Measuring Air Blow (Only for TLM)		○
Air Blow for Automation		☆
Thru MQL Device (Without MQL)		☆
Coolant chiller (Sub Tank)		☆
Power Coolant System (For Automation)		☆
Chip Disposal		
Coolant Tank	400 ℓ	●
Interior Screw Chip Conveyor		-
Chip Conveyor (Hinge/Scraper)	Left	○
	right	☆
	rear	☆
Special Chip Conveyor (Drum Filter)		☆
Chip Wagon	Standard (180 ℓ [47.5 gal])	○
	Swing (200 ℓ [52.8 gal])	○
	Large Swing (290 ℓ [76.6 gal])	○
	Large Size (330 ℓ [87.2 gal])	○
	Customized	☆
S/W		
Dialogue Program (HW-DPRO)		○ (3+2 axis support)
DNC software (HW-eDNC)		○
Smart Guide-i : FANUC		○
Smart S/W		☆

Electric Device		KF6500/5A
Call Light	1 Color : ■	●
Call Light & Buzzer	3 Color : ■■■B	○
Work Light		●
Electric Cabinet Light		○
Remote MPG		●
3 Axis MPG		○
Work Counter	Digital	○
Total Counter	Digital	○
Tool Counter	Digital	○
Multi Tool Counter	Digital	☆
Electric Circuit Breaker		○
Transformer	65kVA	○
Auto Power Off		○
Back up Module for Black out		○
Measuring Device		
Air Zero	TACO	○
	SMC	○
Work Measuring Device		○
TLM	Touch	○
	Laser	○
Tool Broken Detective Device		☆
Linear Scale	X/Y/Z Axis	○
Rotary Scale	B/C Axis	●
Coolant Level Sensor (Bladder Type)		☆
Environment		
Air Conditioner		○
Eco-friendly energy (hydraulic device/chip conveyor saving mode)		○
Dehumidifier		○
Oil Skimmer (Only for Chip Conveyor)		○
MQL (Minimal Quantity Lubrication)		☆
Fixture & Automation		
Auto Door		○
Auto Shutter (Only for Automatic System)		○
Sub O/P		☆
NC rotary TableI/F	Single	-
	Channel	-
Control of Additional Axis	1 Axis	-
	2 Axis	☆
External M Code 4EA		○
Automation Interface		☆
I/O Extension (In & Out)	16 Contact	☆
	8 Contact	☆
AWC (Automatic Workpiece Changer)		☆
Hyd. Device		
Std. Hyd. Unit	70bar/4 ℓ	○
Center Type Hyd. Supply Unit 2×2(Hydraulic : 4port) + Air 2port		○
Fixture Hyd. Unit	50bar	☆
	Customized	☆
ETC		
Tool Box		●
Customized Color	Need for Munsel No.	☆
CAD&CAM Software		☆
Thermal Displacement Compensation Device	8 channels	●
LM guide mounting surface cooling Shaft cooling ball screw		○

*1 : Please check the filter types with sales representative.
Specifications are subject to change without notice for improvement.

SPECIFICATIONS

Standard & Optional (KF7300/5A)

● : Standard ○ : Option ☆ : Prior Consultation - : Non Applicable

Spindle		KF7300/5A
12,000rpm (22kW)	Built-in	●
20,000rpm (22kW)	Built-in	○
Spindle Cooling System		●
ATC		
ATC Extension	40	●
	60	○
Tool Shank Type	BBT40	●
	HSK-A63	○
	BCV40	○
U-Center	D'andrea	☆
Pull Stud	45°	●
Table & Column		
Table Size	Ø730	●
T-Slot Table		●
NC Rotary Table	Gear	●
	DDM	-
Coolant System		
Std. Coolant (Main Spindle Nozzle)		●
* Through Spindle Coolant	20bar	○
	30bar	○
	70bar	○
Top Cover		●
Shower Coolant		○
Gun Coolant		○
Bed Flushing Coolant		○
Air Gun		○
Cutting Air Blow		○
Tool Measuring Air Blow (Only for TLM)		○
Air Blow for Automation		☆
Thru MQL Device (Without MQL)		☆
Coolant chiller (Sub Tank)		☆
Power Coolant System (For Automation)		☆
Chip Disposal		
Coolant Tank	340 ℓ	●
Interior Screw Chip Conveyor		-
Chip Conveyor (Hinge/Scraper)	Left	○
	right	☆
	rear	☆
Special Chip Conveyor (Drum Filter)		☆
Chip Wagon	Standard (180 ℓ [47.5 gal])	○
	Swing (200 ℓ [52.8 gal])	○
	Large Swing (290 ℓ [76.6 gal])	○
	Large Size (330 ℓ [87.2 gal])	○
	Customized	☆
S/W		
Dialogue Program (HW-DPRO)		○ (3+2 axis support)
DNC software (HW-eDNC)		○
Smart Guide-i : FANUC		○
Smart S/W		☆

Electric Device		KF7300/5A
Call Light	1 Color :	●
Call Light & Buzzer	3 Color : B	○
Work Light		●
Electric Cabinet Light		○
Remote MPG		●
3 Axis MPG		○
Work Counter	Digital	○
Total Counter	Digital	○
Tool Counter	Digital	○
Multi Tool Counter	Digital	☆
Electric Circuit Breaker		○
Transformer	65kVA	○
Auto Power Off		○
Back up Module for Black out		○
Measuring Device		
Air Zero	TACO	○
	SMC	○
Work Measuring Device		○
TLM	Touch	●
	Laser	○
Tool Broken Detective Device		☆
Linear Scale	X/Y/Z Axis	○
Rotary Scale	B/C Axis	●
Coolant Level Sensor (Bladder Type)		☆
Environment		
Air Conditioner		○
Eco-friendly energy (hydraulic device/chip conveyor saving mode)		○
Dehumidifier		○
Oil Skimmer (Only for Chip Conveyor)		○
MQL (Minimal Quantity Lubrication)		☆
Fixture & Automation		
Auto Door		○
Auto Shutter (Only for Automatic System)		○
Sub O/P		☆
NC rotary Tablel/F	Single	-
	Channel	-
Control of Additional Axis	1 Axis	-
	2 Axis	☆
External M Code 4EA		○
Automation Interface		☆
I/O Extension (In & Out)	16 Contact	☆
	8 Contact	☆
AWC (Automatic Workpiece Changer)		☆
Hyd. Device		
Std. Hyd. Unit	70bar/4 ℓ	●
Center Type Hyd. Supply Unit 2×2(Hydraulic : 4port) + Air 2port		○
Fixture Hyd. Unit	50bar	☆
	Customized	☆
ETC		
Tool Box		●
Customized Color	Need for Munsel No.	☆
CAD&CAM Software		☆
Thermal Displacement Compensation Device	8 channels	●

*1 : Please check the filter types with sales representative.

Specifications are subject to change without notice for improvement.

Spindle Output/Torque Diagram

KF3500/5A, KF6500/5A Direct 12,000rpm

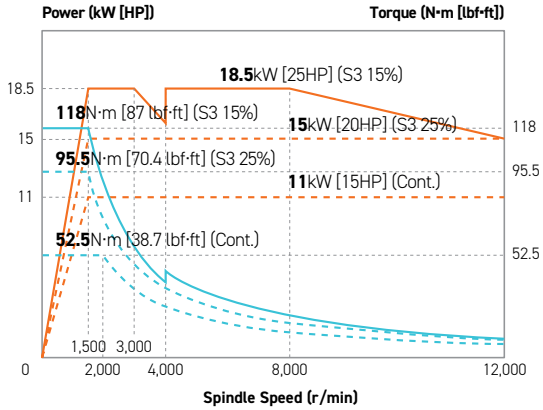

KF3500/5A, KF6500/5A Direct 15,000rpm

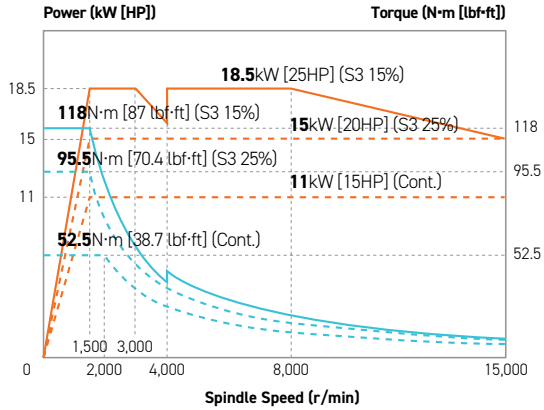

KF7300/5A Built-in 12,000rpm

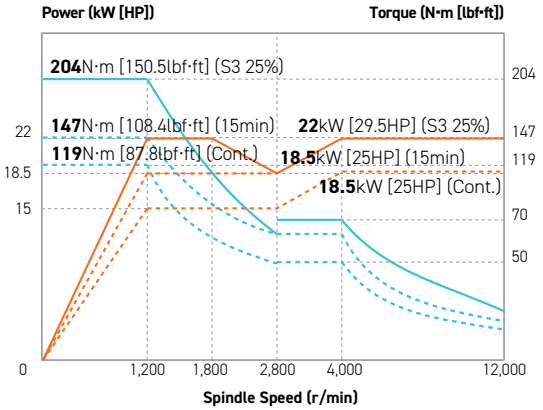

KF3500/5A, KF7300/5A Built-in 20,000rpm

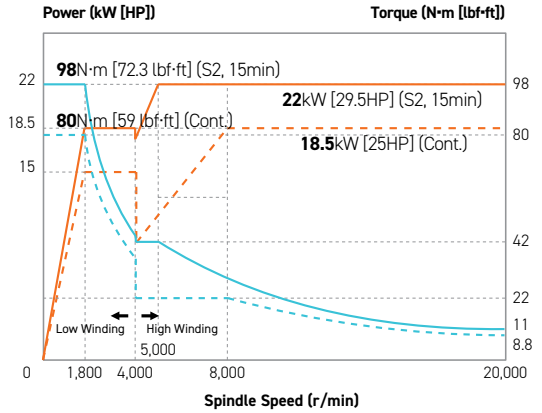

KF6500/5A Built-in 20,000rpm

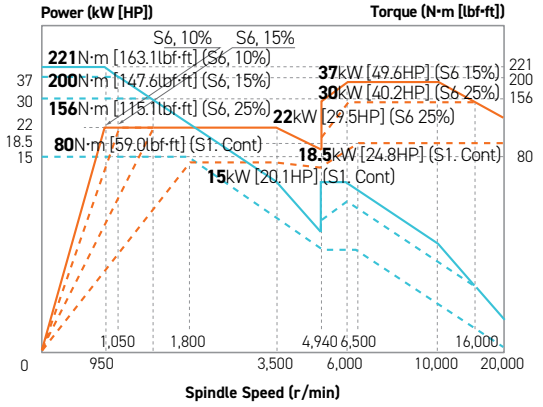

SPECIFICATIONS

External Dimensions (KF3500/5A)

unit : mm(in)

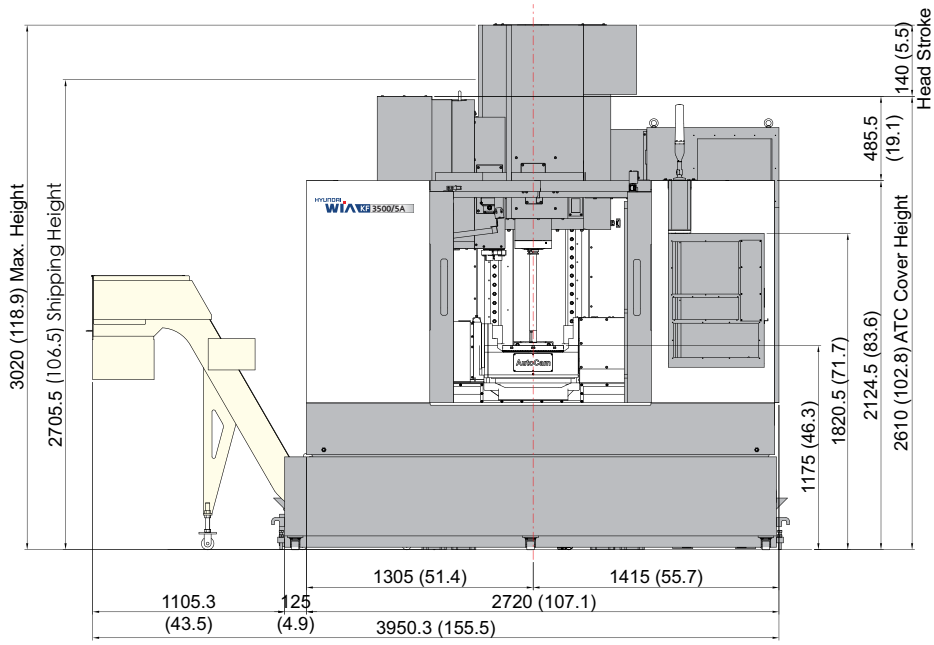

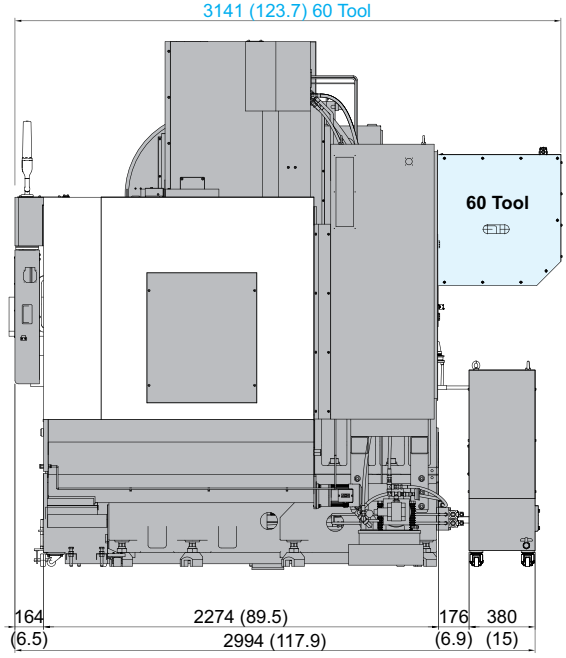

*Level Block Height : Upper Chip Conveyor (Side)_80mm (3.1")

ITEM	Max. Height	30T ATC Cover	40T ATC Cover	60T ATC Cover	Z-axis Motor	Head Cover
Upper/Side	3,020 (118.9)	2,610 (102.8)	2,816 (110.9)	2,411 (94.9)	2,705.5 (106.5)	2,636 (103.8)

External Dimensions (KF6500/5A)

unit : mm(in)

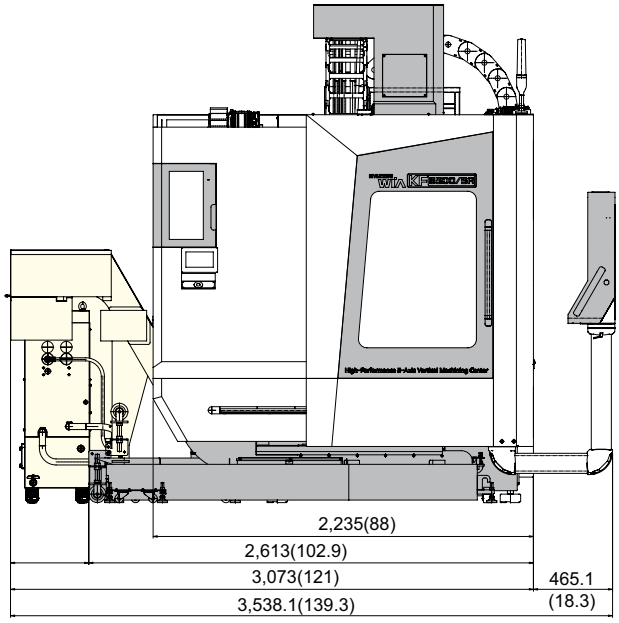

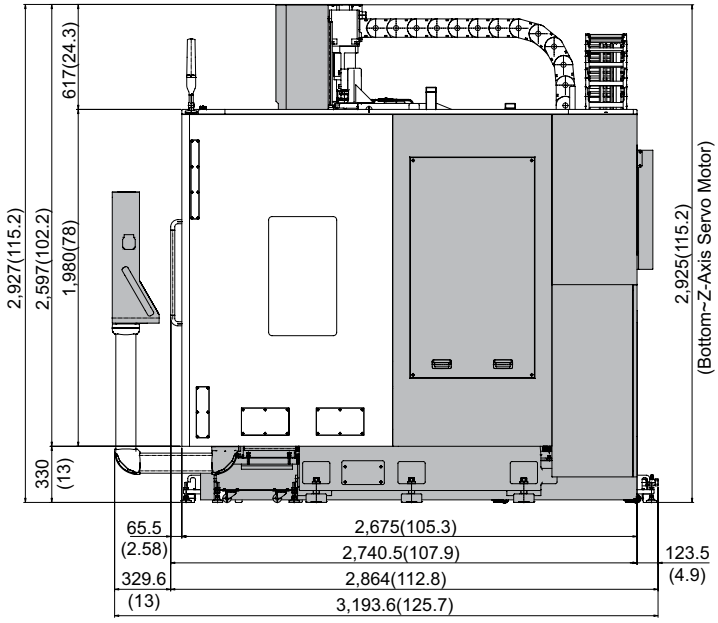

SPECIFICATIONS

External Dimensions (KF7300/5A)

unit : mm(in)

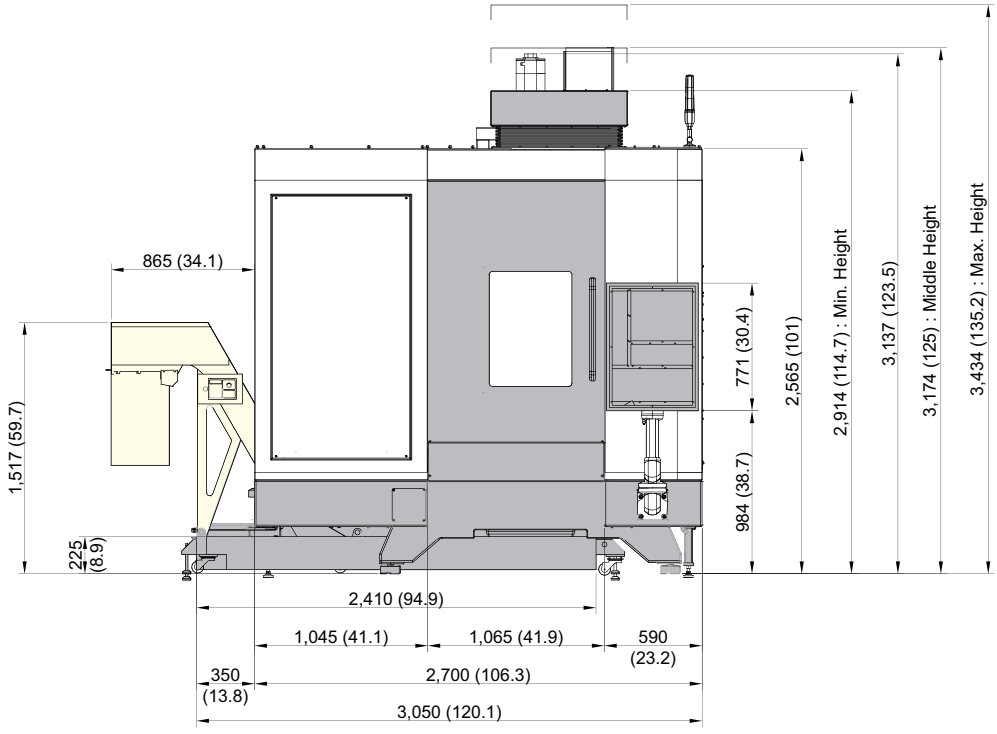

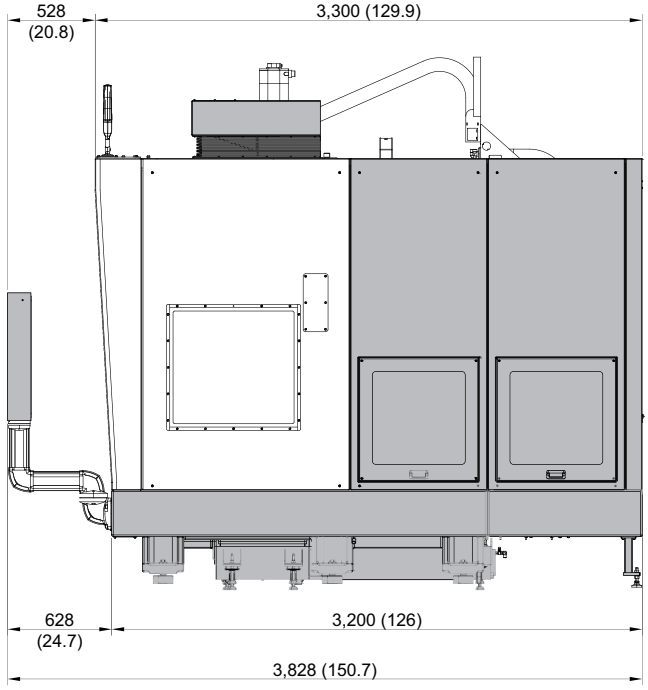

External Dimensions (KF7300/5A+AWC)

unit : mm(in)

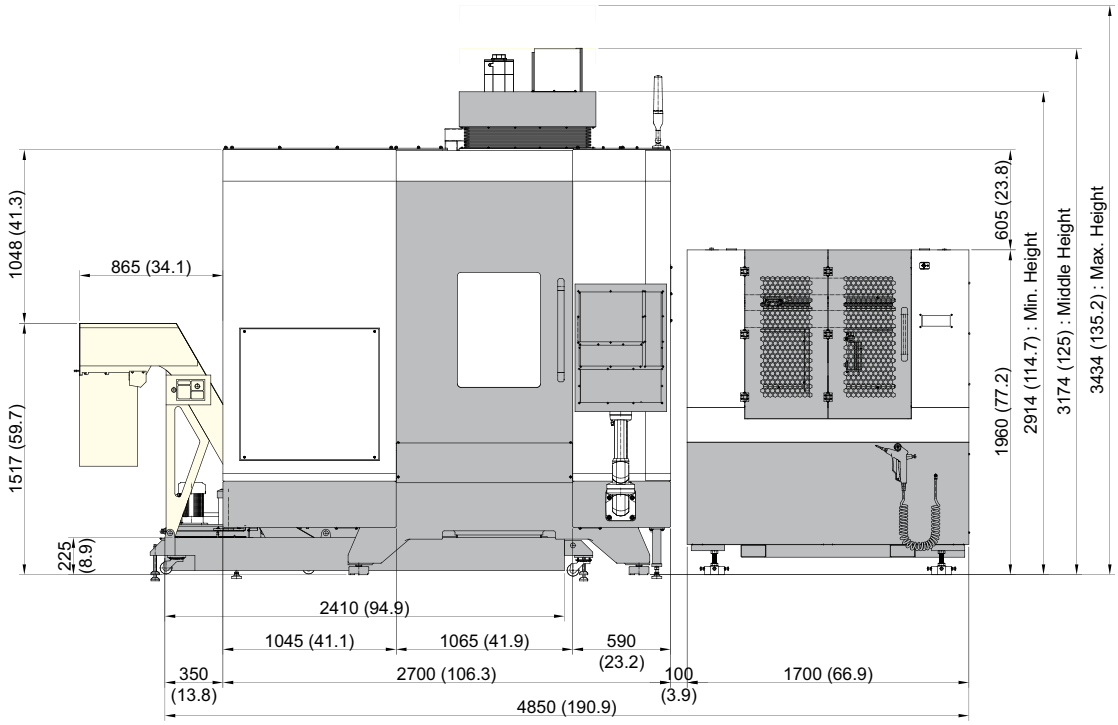

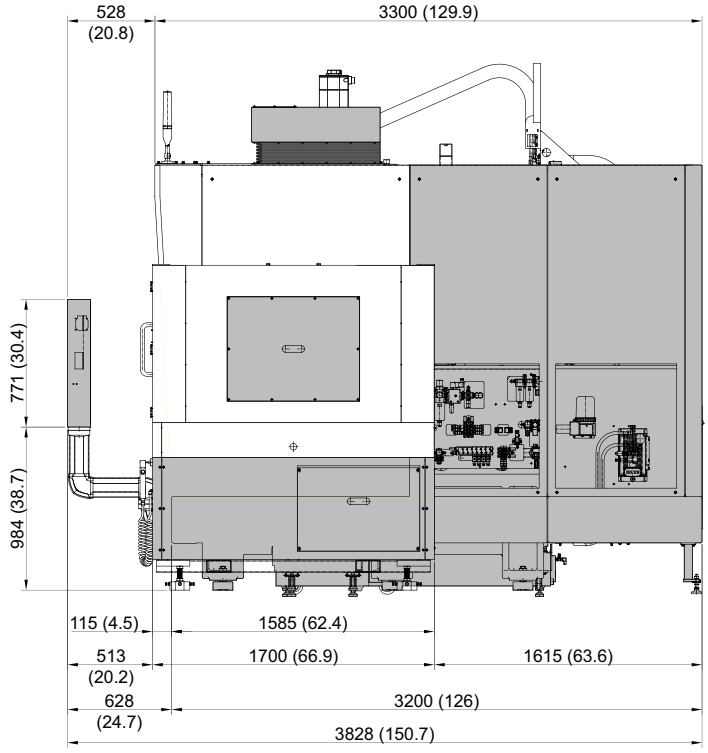

SPECIFICATIONS

Tool Shank

unit : mm(in)

BT40/BBT40, BIG PLUS

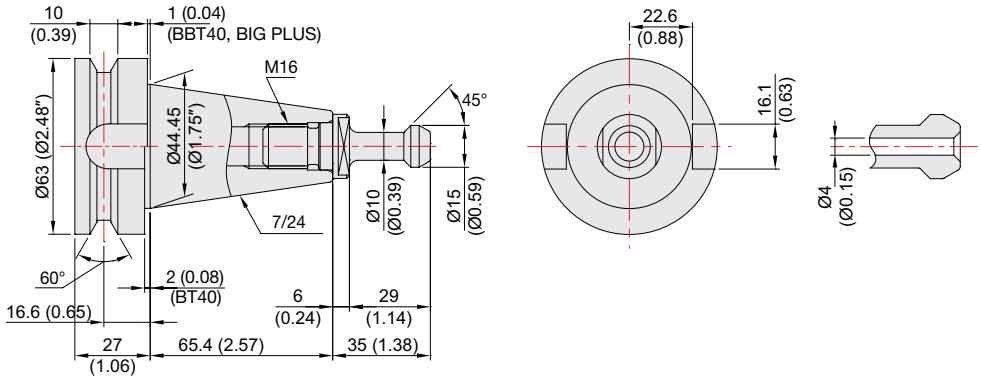

HSK A-63

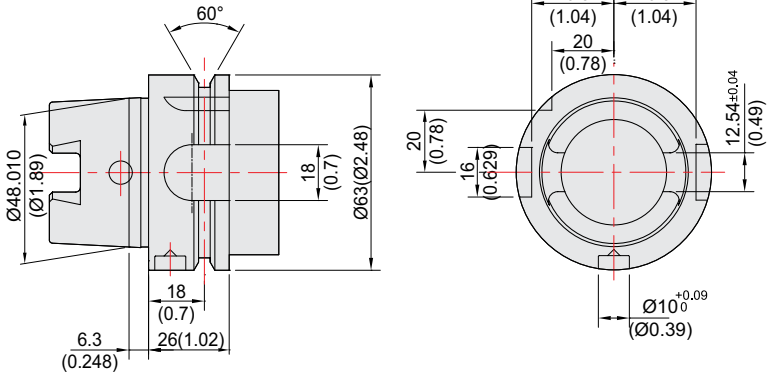

OPTION

KF6500/5A
KF7300/5A

CAT40/BCV40

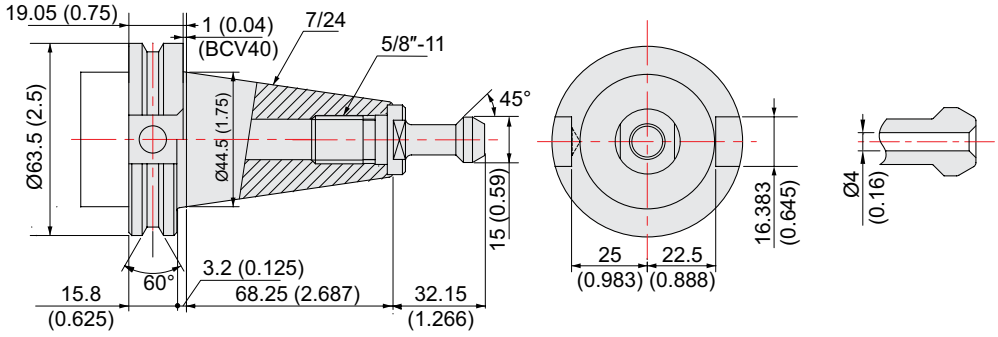

Table Dimensions

unit : mm(in)

KF3500/5A

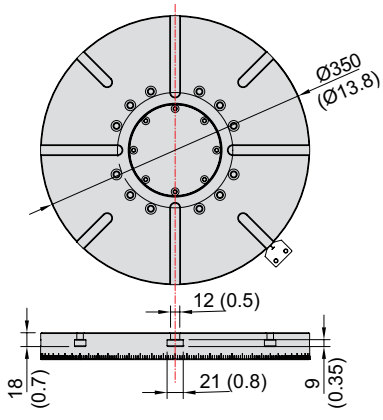

KF6500/5A

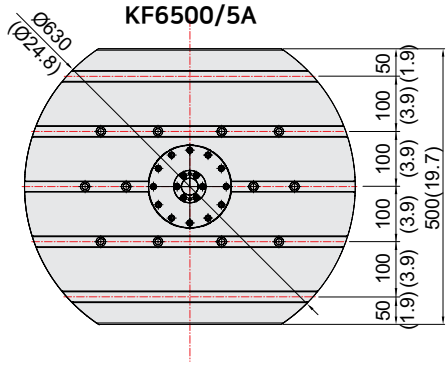

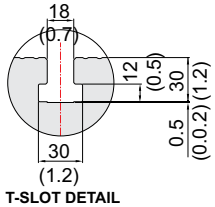

T-SLOT DETAIL

KF7300/5A

(Std. : Ø630)

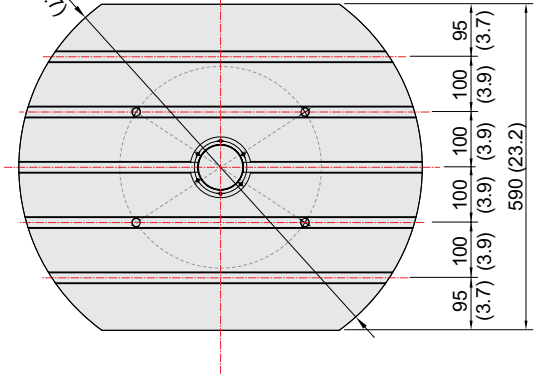

KF7300/5A

(Opt. : Ø730)

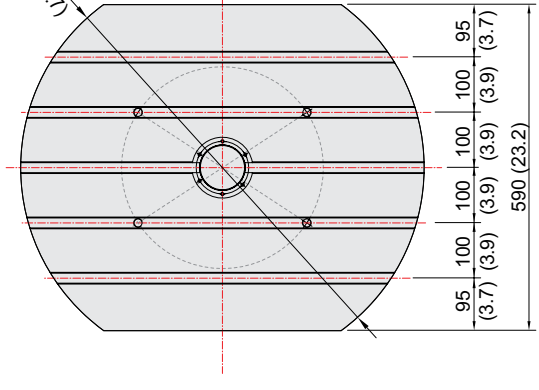

SPECIFICATIONS

Work Interference (KF3500/5A)

unit : mm(in)

Tilting : A-axis 0˚

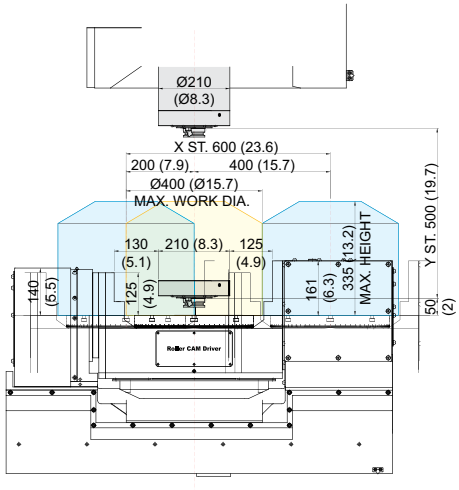

Tilting : A-axis -90˚

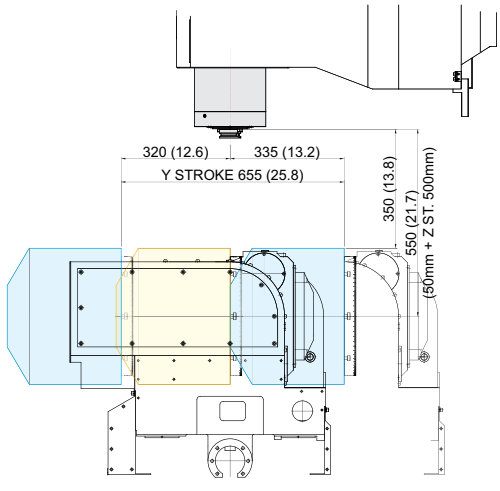

Tilting : A-axis -120˚

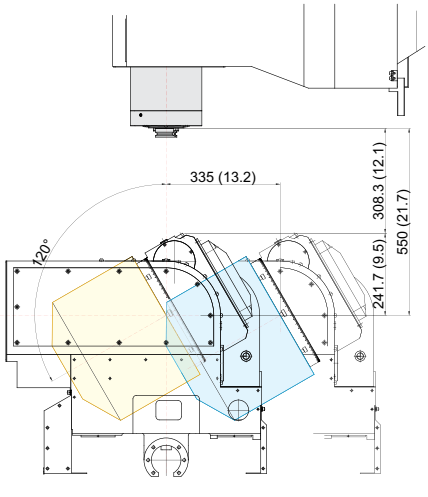

Tilting : A-axis +30˚

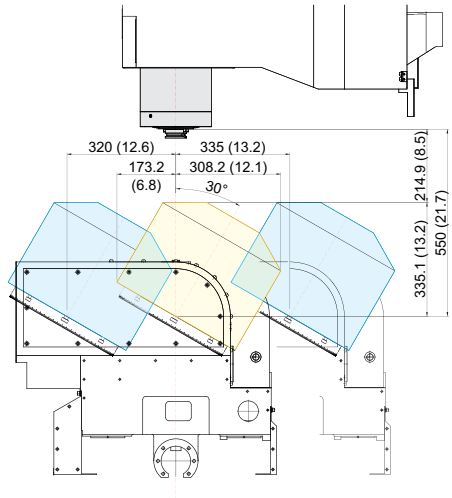

Work Interference (KF6500/5A)

unit : mm(in)

Tilting : B-axis 0°

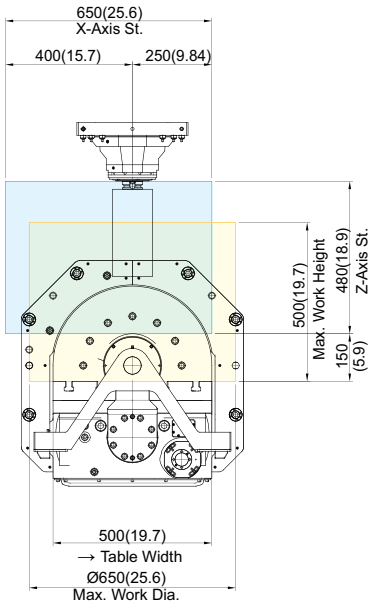

FRONT VIEW

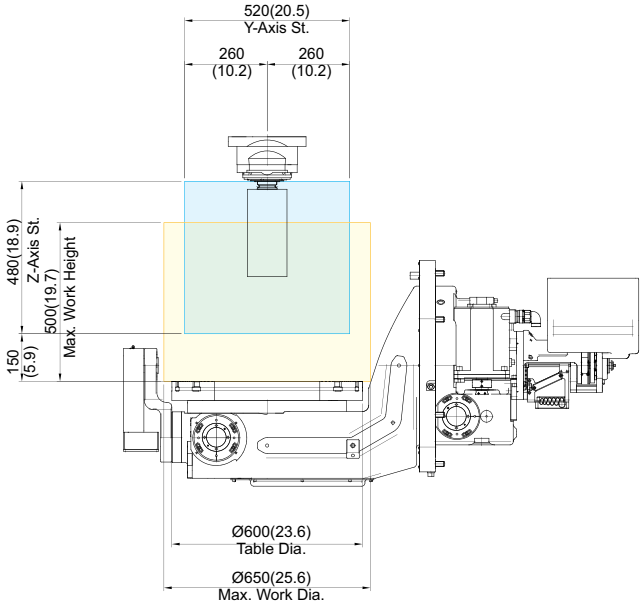

RIGHT VIEW

Tilting : B-axis 120°

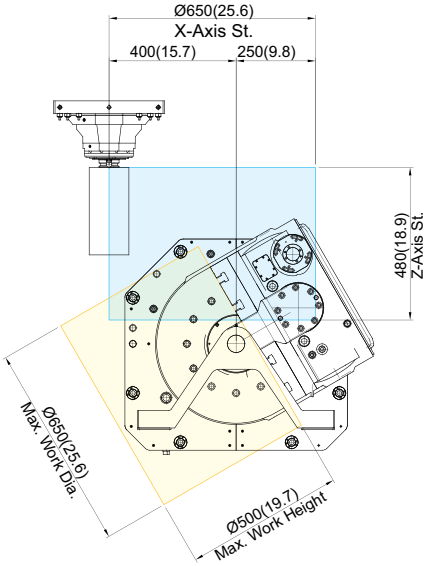

FRONT VIEW

Tilting : B-axis 90°

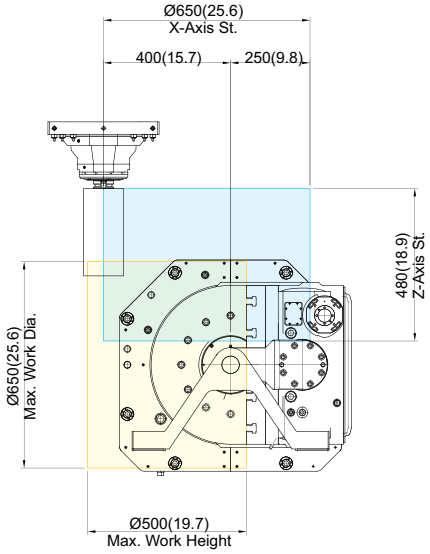

FRONT VIEW

SPECIFICATIONS

Work Interference (KF7300/5A)

unit : mm(in)

Tilting : B-axis 0°

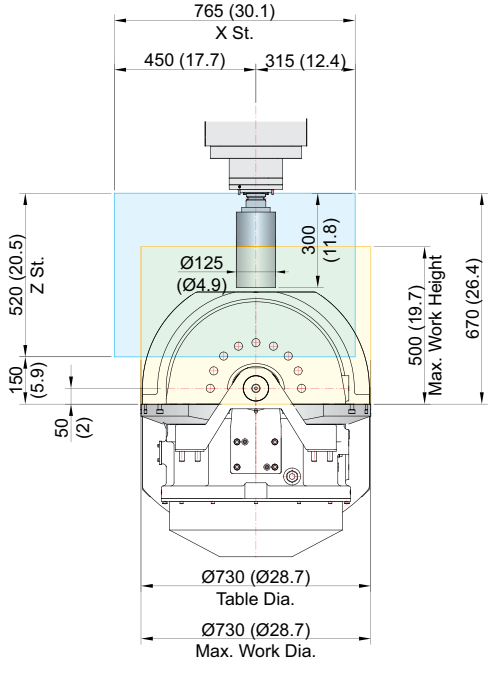

FRONT VIEW

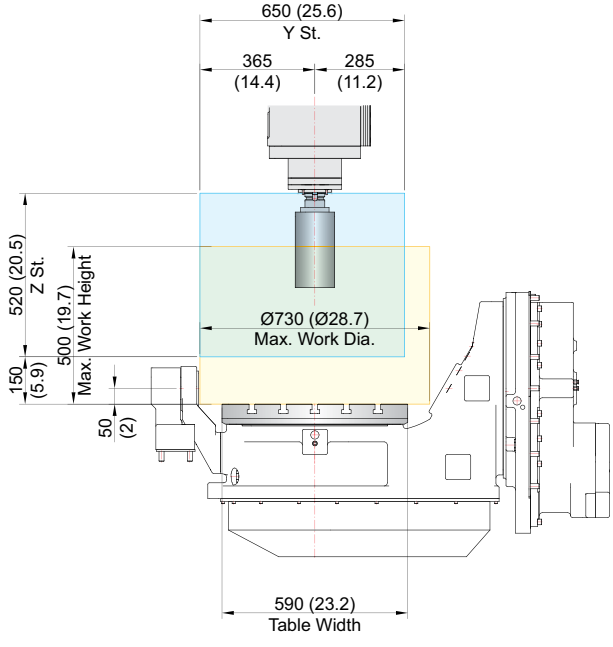

RIGHT VIEW

Tilting : B-axis 120°

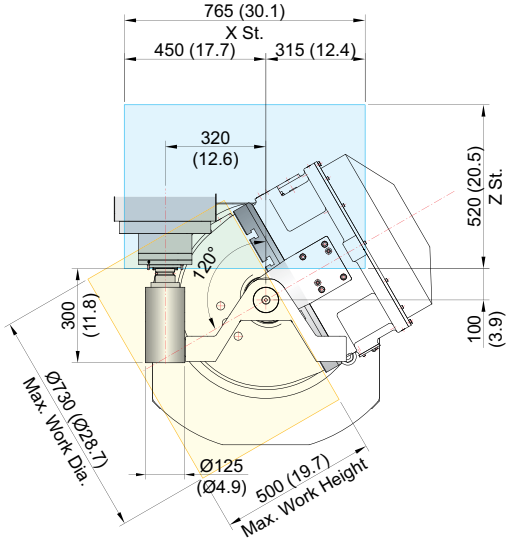

FRONT VIEW

Tilting : B-axis 90°

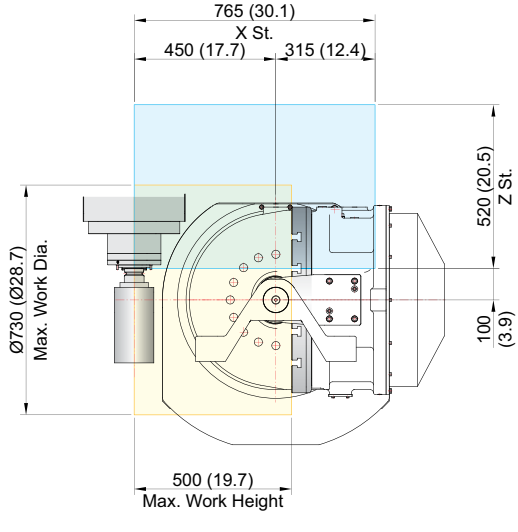

FRONT VIEW

CONTROLLER

Specifications

[ ] : Option

ITEM				KF3500/5A
TABLE	Table Size (L×W)		mm(in)	Ø350 (Ø13.8″)
	Max. Working Size (L×H)		mm(in)	Ø400×335 (Ø15.7″×13.2″)
	Max. Load Capacity		kg(lb)	250 (551) - Max. Inertia : 2.09 kg.m^2
	Table Driving Method		-	Roller Gear Cam
SPINDLE	Spindle Taper		-	BBT40 [HSK-A63]
	Spindle Speed (rpm)		r/min	12,000 [15,000] [20,000]
	Spindle Power (Max./Cont.)		kW(HP)	18.5/11 (25/15) [18.5/11 (25/15)] [22/18.5 (30/25)]
	Spindle Torque (Max./Cont.)		N·m(lbf·ft)	118/52.5 (87/38.7) [118/52.5 (87/38.7)] [98/80 (72.3/59)]
	Spindle Driving Method		-	Direct [Direct] [Built-in]
FEED	Travel	X/Y/Z	mm(in)	400{+200}/655/500 (15.7″{+7.9″}/25.8″/19.7″)
		A/C	deg	150°(+120°~-30°)/360°
	Distance from Table Top to SP. Nose		mm(in)	50~500 (2″~19.7″)
	Rapid Traverse Rate	X/Y/Z	m/min(ipm)	36/36/30 (1,417/1,417/1,181)
		A/C	r/min	30/40
	Slide Type		-	Roller Guide
ATC	Tool Shank		-	BBT40 [HSK-A63]
	Number of Tools		ea	30 [40, 60]
	Max. Tool Dia. (W.T/W.O)		mm(in)	Ø80/Ø125 (Ø3.1″/Ø4.9″) [Ø76/Ø125 (Ø3″/Ø4.9″)]
	Max. Tool Length		mm(in)	Ø76/Ø80 : 270 (10.6″), Ø125 : 210 (8.3″)
	Max. Tool Weight		kg(lb)	8 (17.6)
	Tool Selection Method		-	Random
	Tool Change Time (C-C)		sec	3.4
TANK CAPACITY	Coolant Tank		ℓ (gal)	365 (96.4)
	Lubricating Tank		ℓ (gal)	Grease : 0.7 (0.18) / Oil : 4 (1.06)
	Hydraulic Tank		ℓ (gal)	15 (4)
POWER SUPPLY	Air Consumption (0.5MPa)		ℓ /min(gal)	110 (29)
	Electric Power Supply		KVA	26
	Thickness of Power Cable		mm^2	Over 25
	Voltage		V/Hz	220/60 (200/50)
MACHINE	Floor Space (L×W)		mm(in)	2,845×2,274 (112″×89.5″)
	Height		mm(in)	3,020 (118.9″)
	Weight		kg(lb)	8,000 (17,637)
NC	Controller		-	FANUC i Series - Smart Plus [FANUC 31i-B5 Plus]

Specifications are subject to change without notice for improvement.

SPECIFICATIONS

Specifications

[ ] : Option

ITEM				KF6500/5A
TABLE	Table Size (L×W)		mm(in)	Ø630 (Ø24.8″)
	Max. Working Size (L×H)		mm(in)	Ø650×500 (Ø25.6″×19.7″)
	Max. Load Capacity		kg(lb)	400 (881.8)
	Table Driving Method		-	Roller Gear Cam
SPINDLE	Spindle Taper		-	BBT40 [HSK-A63]
	Spindle Speed (rpm)		r/min	12,000 [15,000] [20,000]
	Spindle Power (Max./Cont.)		kW(HP)	18.5/11 (25/15) [18.5/11 (25/15)] [37/15 (49.6/20.1)]
	Spindle Torque (Max./Cont.)		N·m(lbf·ft)	118/52.5 (87/38.7) [118/52.5 (87/38.7)] [221/80 (163/59)]
	Spindle Driving Method		-	Direct [Direct] [Built-in]
FEED	Travel	X/Y/Z	mm(in)	650/520/480 (25.6″/20.5″/18.9″)
		B/C	deg	150°(+120°~-30°)/360°
	Distance from Table Top to SP. Nose		mm(in)	150 ~ 630 (5.9″~24.8″)
	Rapid Traverse Rate	X/Y/Z	m/min(ipm)	42/42/42 (1,653/1,653/1,653)
		B/C	r/min	(30)/30
	Slide Type		-	Roller Guide
ATC	Tool Shank		-	BBT40 [HSK-A63]
	Number of Tools		ea	30 [40/60/90/120]
	Max. Tool Dia. (W.T/W.O)		mm(in)	30T : Ø80/Ø125 (Ø3.1″/Ø4.9″) [40T : Ø76/Ø125 (Ø3″/Ø4.9″)] [60T, 90T,120T : Ø75/Ø125(Ø2.9″/Ø4.9″)]
	Max. Tool Length		mm(in)	300 (11.8″)
	Max. Tool Weight		kg(lb)	8 (17.6)
	Tool Selection Method		-	Random
	Tool Change Time (C-C)		sec	3.4
TANK CAPACITY	Coolant Tank		ℓ (gal)	400 (105.7)
	Lubricating Tank		ℓ (gal)	Grease : 0.7 (0.18) / Oil : 4 (1.06)
	Hydraulic Tank		ℓ (gal)	-
POWER SUPPLY	Air Consumption (0.5MPa)		ℓ /min(gal)	500 (132.1)
	Electric Power Supply		KVA	26
	Thickness of Power Cable		mm^2	Over 25
	Voltage		V/Hz	220/60 (200/50)
MACHINE	Floor Space (L×W)		mm(in)	2,740x2,235 (107.9″×88″)
	Height		mm(in)	2,927 (115.2″)
	Weight		kg(lb)	8,000 (17,637)
NC	Controller		-	FANUC 31i-B5 Plus [FANUC i Series - Smart Plus]

Specifications are subject to change without notice for improvement.

CONTROLLER

Specifications

[ ] : Option

ITEM				KF7300/5A
TABLE	Table Size (L×W)		mm(in)	Ø730 (Ø28.7″)
	Max. Working Size (L×H)		mm(in)	Ø730×500 (Ø28.7″×19.7″)
	Max. Load Capacity		kg(lb)	500 (1,102)
	Table Driving Method		-	Gear
SPINDLE	Spindle Taper		-	BBT40 [HSK-A63]
	Spindle Speed (rpm)		r/min	12,000 [20,000]
	Spindle Power (Max./Cont.)		kW(HP)	22/18.5 (30/25) [22/18.5 (30/25)]
	Spindle Torque (Max./Cont.)		N·m(lbf·ft)	204/119 (150.5/87.8) [98/80 (72.3/59)]
	Spindle Driving Method		-	Built-in
FEED	Travel	X/Y/Z	mm(in)	765/650/520 (30.1″/25.6″/20.5″)
		B/C	deg	150°(+120°~-30°)/360°
	Distance from Table Top to SP. Nose		mm(in)	150 ~ 670 (5.9″~26.4″)
	Rapid Traverse Rate	X/Y/Z	m/min(ipm)	40/40/40 (1,575/1,575/1,575)
		B/C	r/min	(25)/30
	Slide Type		-	Roller Guide
ATC	Tool Shank		-	BBT40 [HSK-A63]
	Number of Tools		ea	40 [60]
	Max. Tool Dia. (W.T/W.O)		mm(in)	Ø76/Ø125 (Ø3″/Ø4.9″) [Ø75/Ø127 (Ø3″/Ø5″)]
	Max. Tool Length		mm(in)	300 (11.8″)
	Max. Tool Weight		kg(lb)	8 (17.6)
	Tool Selection Method		-	Random
	Tool Change Time (C-C)		sec	5.4
TANK CAPACITY	Coolant Tank		ℓ (gal)	340 (89.8)
	Lubricating Tank		ℓ (gal)	Grease : 0.7 (0.18) / Oil : 4 (1.06)
	Hydraulic Tank		ℓ (gal)	4 (1.1)
POWER SUPPLY	Air Consumption (0.5MPa)		ℓ /min(gal)	575 (151.9)
	Electric Power Supply		KVA	43
	Thickness of Power Cable		mm^2	Over 35
	Voltage		V/Hz	220/60 (200/50)
MACHINE	Floor Space (L×W)		mm(in)	3,050×3,300 (120.1″×129.9″)
	Height		mm(in)	3,174 (125″)
	Weight		kg(lb)	11,500 (25,353)
NC	Controller		-	FANUC 31i-B5 Plus

Specifications are subject to change without notice for improvement.

CONTROLLER

FANUC i Series - Smart Plus (KF3500/5A | KF6500/5A)

[ ] : Option ☆ Needed technical consultation

Controlled axis / Display / Accuracy Compensation		
Control axis		3 axis (X, Y, Z)
		[4 axis (X, Y, Z, A/B)] [5 axis (X, Y, Z, A/B,C)]
Simultaneously controlled axis		3 axis [Max. 4 axis]
Least setting Unit		X, Y, Z axis : 0.001 mm (0.0001 inch)
		A/B axis : 1 deg [0.001] deg
Least input increment		X, Y, Z axis : 0.001 mm (0.0001 inch)
		B axis : 1 deg [0.001] deg
Inch / Metric conversion		
High response vector control		
Interlock		All axis / Each axis
Machine lock		All axis
Backlash compensation		± 0 ~ 9999 pulses (Rapid traverse / Cutting feed)
Position switch		
LCD / MDI	KF3500/5A	15″ color LCD with Touch screen
	KF6500/5A	19″ color LCD with Touch screen
Feedback		Absolute motor feedback
Stored stroke check 1		Over travel
Stored stroke check 2, 3		
Stored pitch error compensation		
Operation		
Automatic operation (Memory)		
MDI operation		
DNC operation		Needed DNC software / CF card
Program restart		
Wrong operation prevention		
Program check function		Dry run, Program check, Z axe Machine lock
		Stored limit check before move
Single block		
Search function		Program Number / Sequence Number
Handle interruption		
Interpolation functions		
Nano interpolation		
Positioning		G00
Linear interpolation		G01
Circular interpolation		G02, G03
Exact stop mode		Single : G09, Continuous : G61
Dwell		G04, 0 ~ 9999.9999 sec
Skip		G31
Reference position return		1st reference, G28 / 2nd reference, G30
		Ref. position check, G27
Single direction positioning		G60
Thread synchronous cutting		G33
Helical interpolation		Circular + Linear 2 axis (Max.)
Feed function / Acc. & Dec. control		
Manual feed		Rapid traverse
		Jog : 0~5,000mm/min (197 ipm)
		Manual handle : x1, x10, x100 pulses
		Reference position return
Cutting Feed command		Direct input F code
Feedrate override		0 ~ 200% (10% Unit)
Rapid traverse override		1%, 25%, 50%, 100%
Override cancel		
Feed per minute		G94
Feed per revolution		G95
Cylindrical interpolation		G07.1
Inverse time feed		G93
Look-ahead block	KF3500/5A	200 blocks (AICC Ⅱ)
	KF6500/5A	400 blocks (AICC Ⅱ)
Program input		
Tape Code		EIA / ISO
Optional block skip		9 ea
Absolute / Incremental program		G90 / G91
Program stop / end		M00, M01 / M02, M30
Maximum command unit		± 999,999.999 mm (± 99,999.9999 inch)
Plane selection		X-Y, G17 / Z-X, G18 / Y-Z, G19
Workpiece coordinate system		G52, G53, 48 pairs (G54.1 P1 ~ 48)
Manual absolute		Fixed ON
Programmable data input		G10
Sub program call		10 folds nested
Custom macro		#100 ~ #199, #500 ~ #999
Programmable mirror image		G51.1, G50.1
G code preventing buffering		G4.1
Optional chamfering corner R		

Program input		
Polar coordinate command		G15, G16
Canned cycle		G73, G74, G76, G80 ~ G89
Scaling		G50, G51
Coordinate system rotation		G68, G69
Conversational Program		Smart Guide-i
Auxiliary function / Spindle speed function		
Level-up M Code		Multi / Bypass M code
Spindle speed function		S & 5 digit , Binary output
Spindle override		0% ~ 150% (10% Unit)
Spindle orientation		M19
Retraction for rigid tapping		
FSSB high speed rigid tapping		
Tool function / Tool compensation		
Tool function		Max. T8 digit
Tool life management		
Tool offset pairs		400 pairs
Tool nose / radius compensation		G40, G41, G42
Tool length offset		G43, G44, G49
Tool offset memory C		Tool geometry and wear
		(Cutter and tool length)
Tool length measurement		Z axe Input C
Editing function		
Part program storage size	KF3500/5A	5,120m (2MB)
	KF6500/5A	20,480m (8MB)
No. of registerable programs		1,000 ea
Program protect		
Background editing		
Extended part program editing		Copy, move and change of NC program
Memory card program edit		
Data input / output & Interface		
I/O interface		CF card, USB memory
		Embedded Ethernet interface
Screen hard copy		
External message		
External key input		
External workpiece number search		
Automatic data backup		
Setting, display and diagnosis		
Self-diagnosis function		
History display & Operation		Alarm & Operator message & Operation
Run hour / Parts count display		
Maintenance information		
Actual cutting feedrate display		
Display of spindle speed / T code		
Graphic display		
Operating monitor screen		Spindle / Servo load etc.
Power consumption monitoring		Spindle & Servo
Spindle / Servo setting screen		
Multi language display		Support 24 languages
Display language switching		Selection of 5 optional Languages
LCD Screen Saver		Screen saver

Option		
Fast ethernet		Needed option board
Data server		Needed option board
Protection of data at 8 levels		
Additional Axis		
Manual handle feed		2/3 units
Addition of custom macro		#100 ~ #199,
		#500 ~ #999, #98000 ~ #98499
Add. Workpiece		Max. 300 pairs (G54.1 P1 ~ P300)
AICC Ⅱ	KF3500/5A	400 blocks ☆

Figures in inch are converted from metric values.
The FANUC controller specifications are subject to change based on the policy of company CNC supplying.

CONTROLLER

FANUC 31i-B5 Plus

[ ] : Option ☆ Needed technical consultation

Controlled axis / Display / Accuracy Compensation		
Control axis		5 axis (X, Y, Z, A/B, C)
Simultaneously controlled axis		5 axis (X, Y, Z, A/B, C)
Least setting Unit		X, Y, Z axis : 0.001 mm (0.0001 inch)
		A/B axis : 1 deg [0.001] deg
Least input increment		X, Y, Z axis : 0.001 mm (0.0001 inch)
		A/B axis : 1 deg [0.001] deg
Inch / Metric conversion		G20 / G21
High response vector control		
Interlock		All axis / Each axis
Machine lock		All axis
Backlash compensation		± 0~9999 pulses (Rapid traverse / Cutting feed)
Position switch		
LCD / MDI	KF6500/5A	19″ color LCD with Touch screen
	KF3500/5A / KF7300/5A	15″ color LCD with Touch screen
Feedback		Absolute motor feedback
Stored stroke check 1		Over travel
Stored stroke check 2, 3		
Pitch error compensation		Interpolation Type
Operation		
Automatic operation (Memory)		
MDI operation		
DNC operation		Needed DNC software / CF card
Program restart		
Wrong operation prevention		
Program check function		Dry run, Program check
		Z axis Machine lock, Stroek check before move
Single block		
Search function		Program Number / Sequence Number
Handle interrupt		
3D Manual Feeding		
Retraction for rigid tapping		
Manual guide i		Smart Guide i
Interpolation functions		
Nano interpolation		G05.1
Positioning		G00
Linear interpolation		G01
Cylinderical interpolation (Including 3D)		G02,G03 (G02.4, G03.4)
Exact stop mode		Single : G09, Continuous : G61
One-way positioning		G60
Inverse-time feed		G93
Dwell		G04, 0 ~ 9999.9999 sec
Skip		G31
Reference position return		1st reference : G28
		2, 3, 4 reference : G30 P2, P3, P4
		Ref. position check : 27
Thread synchronous cutting		G33
Helical interpolation		Circular + Linear interpolation 2 axis (max.)
Feed function / Acc. & Dec. control		
Manual feed		Rapid traverse
		Jog : 0~5,000mm/min (197 ipm)
		Manual handle : x1, x10, x100 pulses
		Reference position return
Cutting Feed command		Direct input F code
Feedrate override		0 ~ 200% (10% Unit)
Rapid traverse override		F0% (F1%), F25%, F50%, F100%
Override cancel		
Feed per minute		G94
Feed per revolution		G95
Look-ahead block		600 Block
Program input		
Tape Code		EIA / ISO
Optional block skip		9 ea
Absolute / Incremental program		G90 / G91
Program stop / end		M00, M01 / M02, M30
Maximum command unit		± 999,999.999 mm (± 99,999.9999 inch)
Plane selection		X-Y : G17 / Z-X : G18 / Y-Z : G19
Workpiece coordinate system		G52, G53, 48 pairs (G54.1 P1 ~ P48)
Manual absolute		Fixed ON
Programmable data input		G10
Sub program call		10 folds nested

Controlled axis / Display / Accuracy Compensation	
Custom macro	#100~#199, #500~#599, #98000~#98499
G code system	A
Inclined surface command / Tool axis direction control	G68.2 / G53.1
Scaling	G50, G51
Programmable mirror image	G51.1, G50.1
Polar coordinate command	G15, G16
Do not look ahead function	G4.1
Including Chamfering / Corner R	
Canned cycle	G73, G74, G76, G80 ~ G89
Coordinate rotation	G68, G69
Auxiliary function / Spindle speed function	
Auxiliary function	M 4 digit
Level-up M Code	Multi / By-Pass
Spindle speed command	S 5 digit , Binary output
Spindle override	50% ~ 120% (10% Unit)
Spindle orientation	M19
FSSB high speed rigid tapping	
Tool function / Tool compensation	
Tool function	Max. T 8 digit
Tool life management	256 pairs ☆
Tool offset pairs	400 pairs
Tool nose radius compensation (Including 3D)	G40, G41, G42 (G41.2~6, G42.2~6)
Tool nose length compensation (With leading point control)	G43, G44, G49 (G43.4~5)
Tool offset memory C	Tool length, diameter, abrasion(length, diameter)
Tool length measurement	Z axis Input C
Editing function	
Part program storage size	10,240m (4MB)
No. of registerable programs	1,000 ea
Program protect	
Background editing	
Extended part program editing	
Memory card program edit	Copy, move and change of NC program
Protection of data at 8 levels	
Data input / output & Interface	
I/O interface	Memory card, USB memory interface
	Embedded Ethernet interface
Screen hard copy	
External message	
External key input	
External workpiece number search	
Automatic data backup	
Setting, display and diagnosis	
Self-diagnosis function	
History display	Alarm & Operator message & Operation
Run hour / Parts count display	
Maintenance information	
Actual cutting feedrate display	
Display of spindle speed / T code	
Graphic display	
Operating monitor screen	
Power consumption monitoring	Spindle & Servo
Multi language display	Support 25 languages
Display language switching	Selection of 5 optional Languages
LCD Screen Saver	Screen saver
Macro Excutor	Custom software 8MB (WIA Screen)☆
Processing select	Speed/ridigity setting

Option	
Fast ethernet	Needed option board
Data server	Needed option board (1GB, 2G, 4GB)
Sub Spindle control	☆
Polar coordinate interpolation	G12.1, G13.1
Cylinderical interpolation	G07.1
Manual handle feed	2/3 units
Tool management function	
Tool offset number	499 ~ Max. 2,000 pair
Program storage capacity	~ 8MByte
Program registration number	Max. 4,000 ea
Additional work coordinate	300 pair (G54.1 P1 ~ P300)

Figures in inch are converted from metric values.
The FANUC controller specifications are subject to change based on the policy of company CNC supplying.

WIA MACHINE TOOLS

home page facebook youtube instagram linkedin

Headquarter / R&D Center 106, Yongji-ro, Seongsan-gu, Changwon-si, Gyeongsangnam-do, Republic of Korea **TEL** : +82 55 225 9999

Overseas Sales Team 13, Iljik-ro 12beon-gil, Gwangmyeong-si, Gyeonggi-do, Republic of Korea **TEL** : +82 055 225 9645

OVERSEAS OFFICES

America corp. 450 Commerce Blvd, Carlstadt, NJ 07072, USA **TEL** : +1-201-987-7298

Europe GmbH Alexander-Fleming-Ring 57, 65428 Russelsheim Germany **TEL** : +49-0-6142-9256-0

China corp. Company No.16 Fenghuang Road, Fenghuang Town, Zhangjiagang City, Jiangsu Province, China **TEL** : +86-512-5637-9719

CIS Branch Office 050051, Kazakhstan, Almaty, Elebekova street 10, B.3 Office no. 103 **TEL** : +7-727-355-7133

India Pvt. Ltd. #4/169, 1st Floor, LOTTE BLDG, Rajiv Gandhi Salai, (OMR), Kandanchavadi, Chennai - 600096, Tamilnadu, India **TEL** : +91-76-0490-3348

2026-10 003.022 ENG